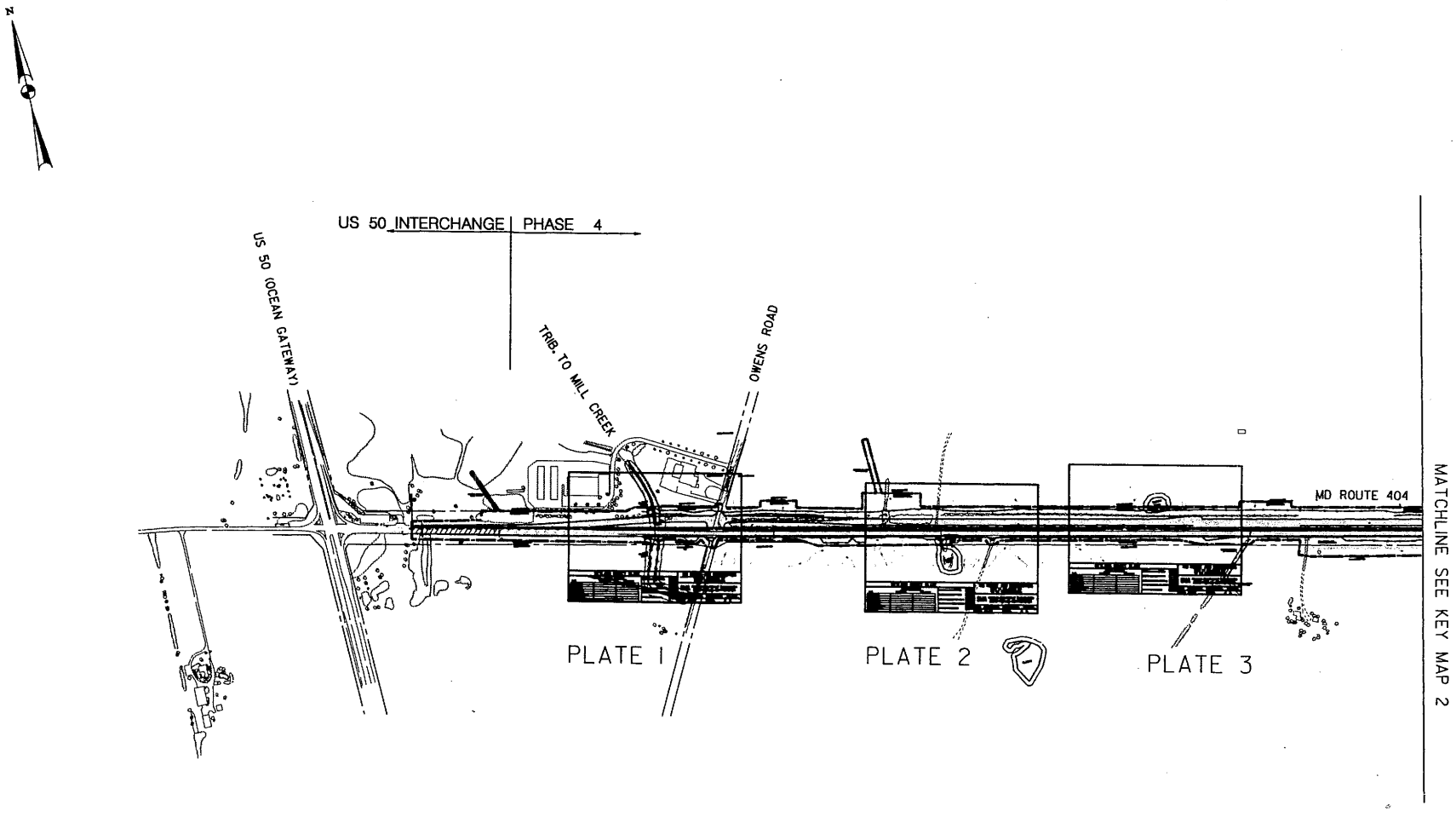

MD ROUTE 404 DUALIZATION

EAST OF U.S. ROUTE 50
TO THE DENTON BYPASS

SHA Maryland Department of Transportation
State Highway Administration

DATE: OCTOBER 2007	REVISION DATE: MARCH 2008
SCALE: 1" = 1000'	KEY MAP 1 OF 8

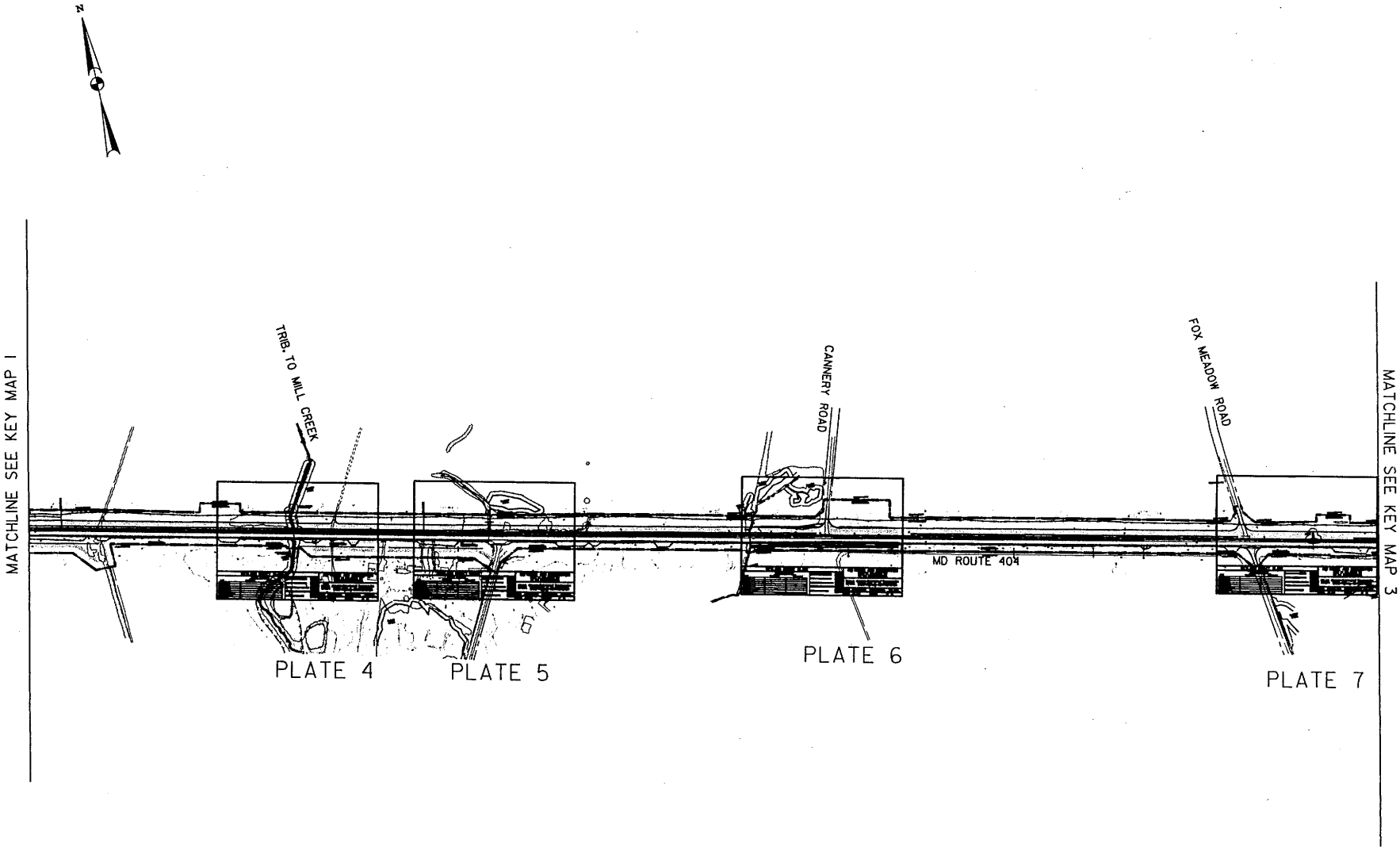

MD ROUTE 404 DUALIZATION

EAST OF U.S. ROUTE 50
TO THE DENTON BYPASS

SHA Maryland Department of Transportation
State Highway Administration

DATE: OCTOBER 2007	REVISION DATE: MARCH 2008
SCALE: 1" = 1000'	KEY MAP 2 OF 8

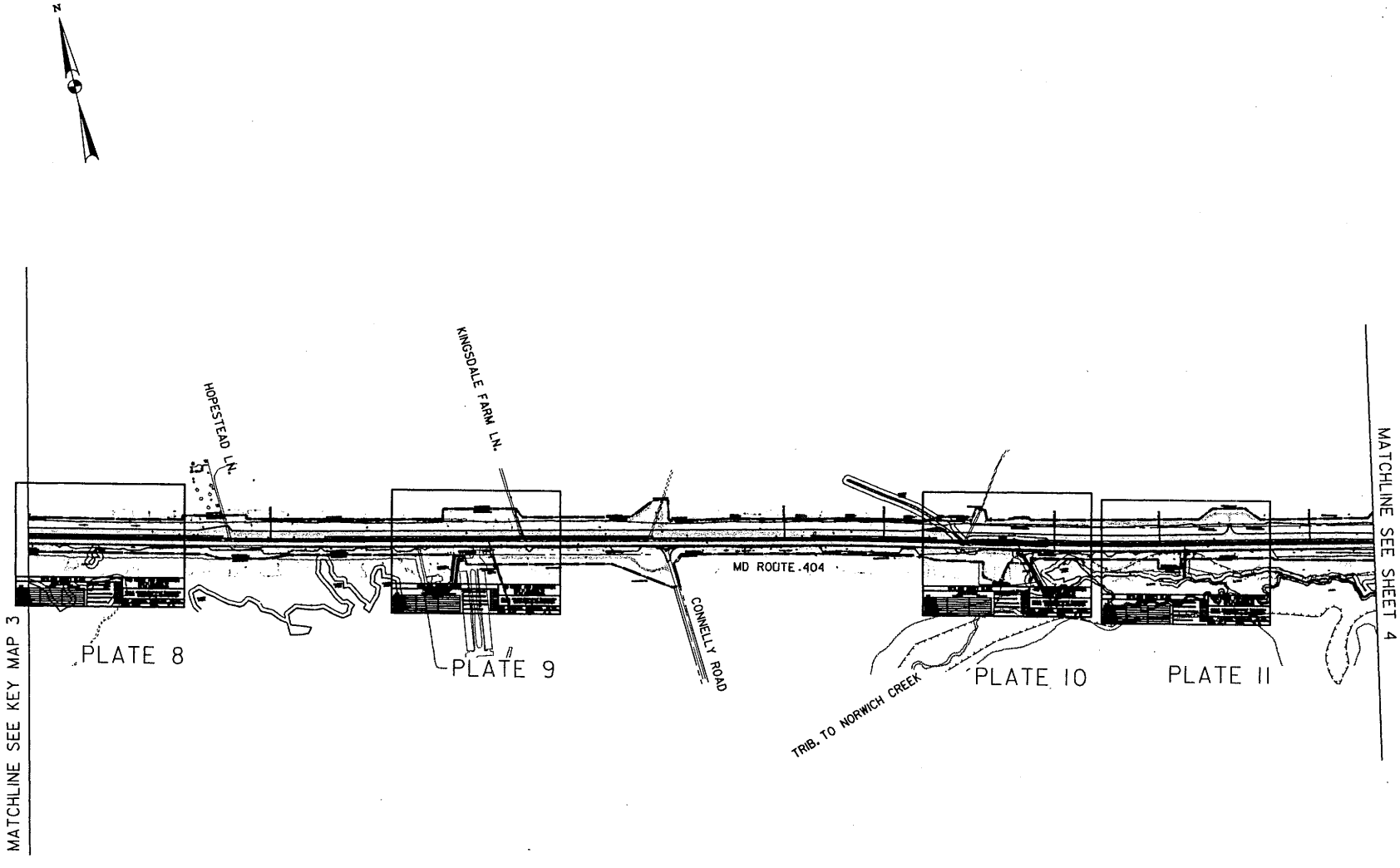

MD ROUTE 404 DUALIZATION

EAST OF U.S. ROUTE 50
TO THE DENTON BYPASS

SHA *Maryland Department of Transportation*
State Highway Administration

DATE: OCTOBER 2007	REVISION DATE: MARCH 2008
SCALE: 1" = 1000'	KEY MAP 3 OF 8

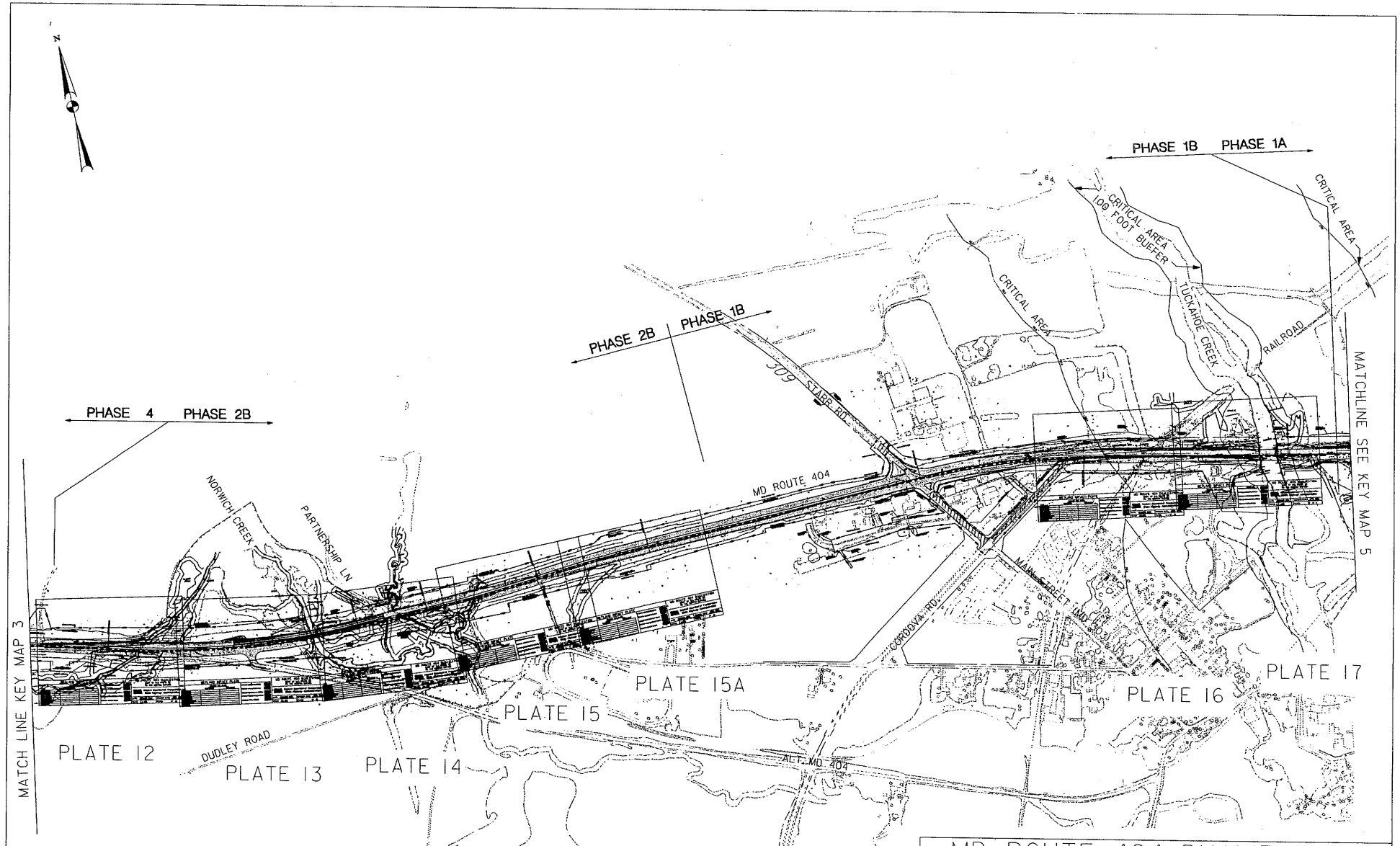

MD ROUTE 404 DUALIZATION

EAST OF U.S. ROUTE 50
TO THE DENTON BYPASS

SHA Maryland Department of Transportation
State Highway Administration

DATE: OCTOBER 2007	REVISION DATE: APRIL 2008
SCALE: 1" = 1000'	KEY MAP 4 OF 8

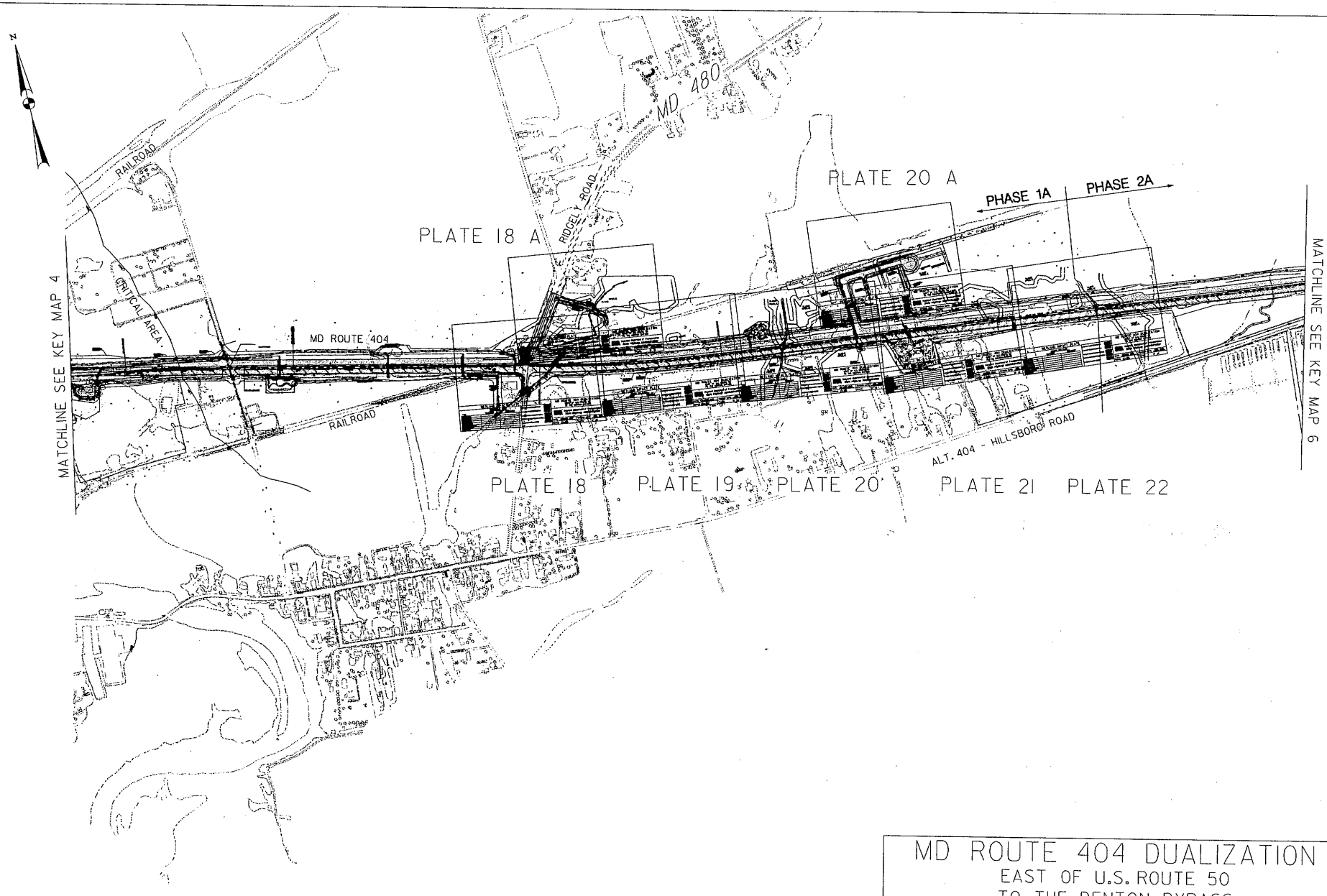

MD ROUTE 404 DUALIZATION

EAST OF U.S. ROUTE 50
TO THE DENTON BYPASS

SHA Maryland Department of Transportation
State Highway Administration

DATE: OCTOBER 2007	REVISION DATE: APRIL 2008
SCALE: 1" = 1000'	KEY MAP 5 OF 8

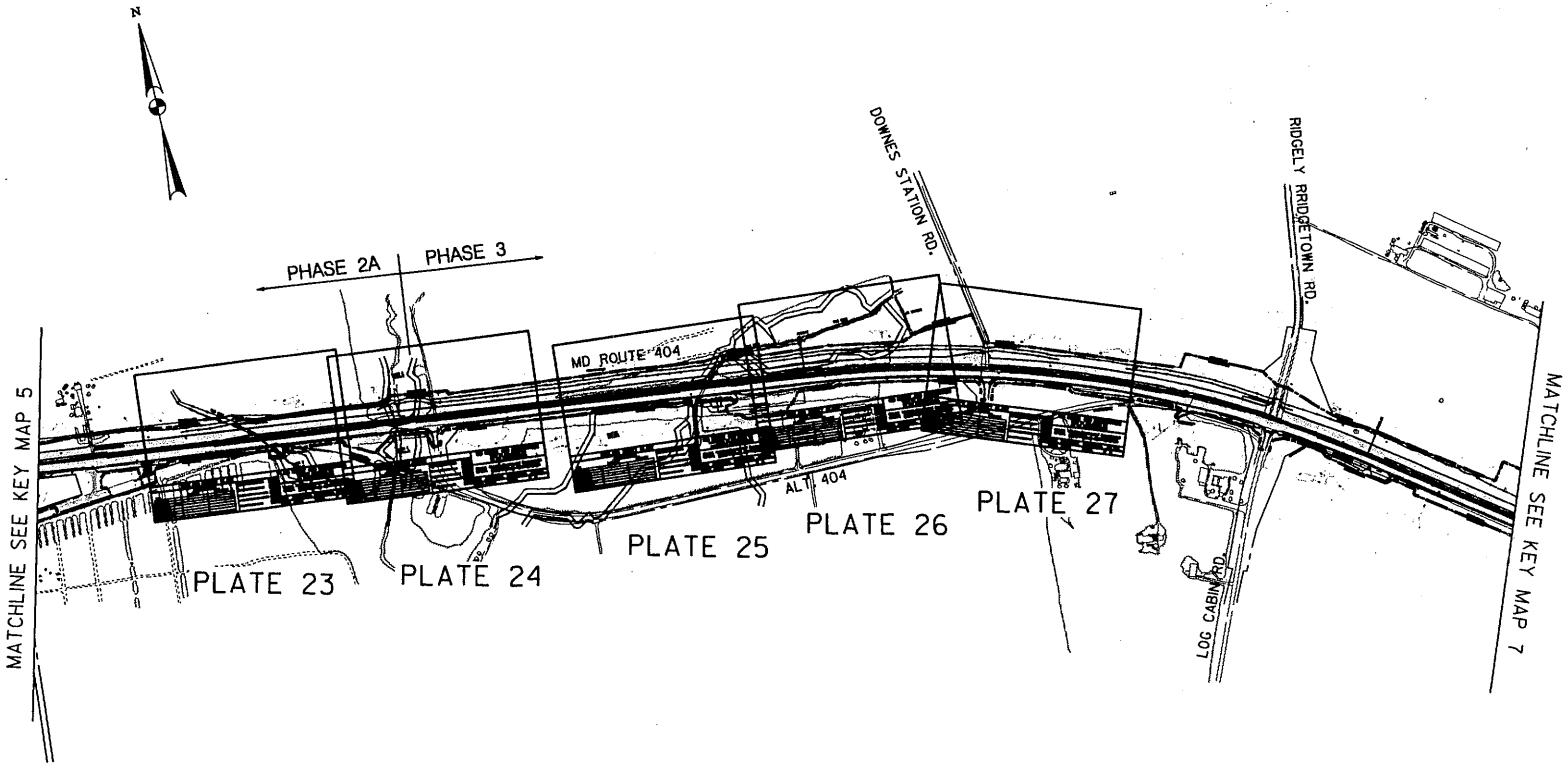

MD ROUTE 404 DUALIZATION

EAST OF U.S. ROUTE 50
TO THE DENTON BYPASS

SHA *Maryland Department of Transportation*
State Highway Administration

DATE: OCTOBER 2007	REVISION DATE: MARCH 2008
SCALE: 1" = 1000'	KEY MAP 6 OF 8

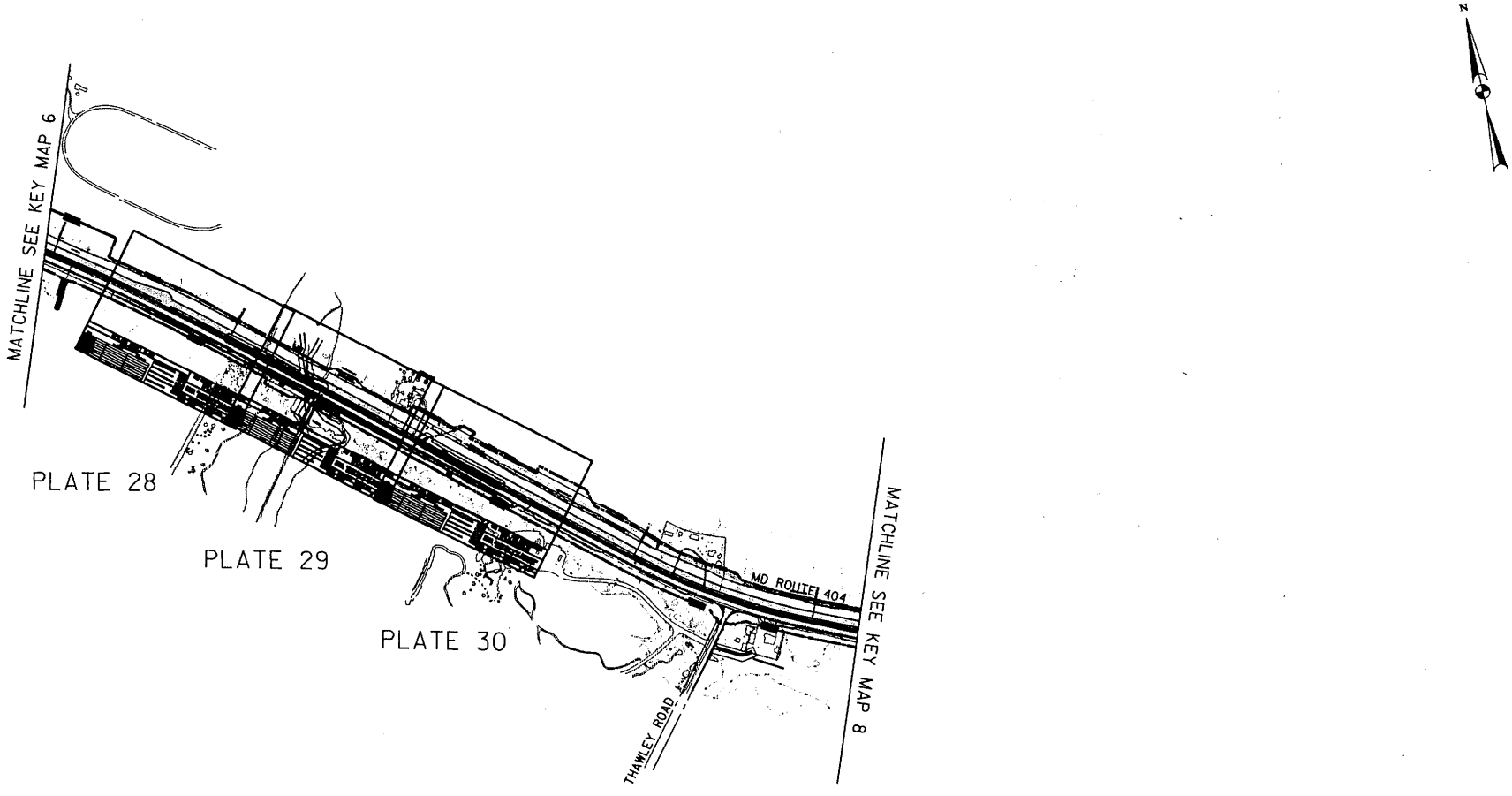

MD ROUTE 404 DUALIZATION

EAST OF U.S. ROUTE 50
TO THE DENTON BYPASS

SHA Maryland Department of Transportation
State Highway Administration

DATE: OCTOBER 2007	REVISION DATE: MARCH 2008
SCALE: 1" = 1000'	KEY MAP 7 OF 8

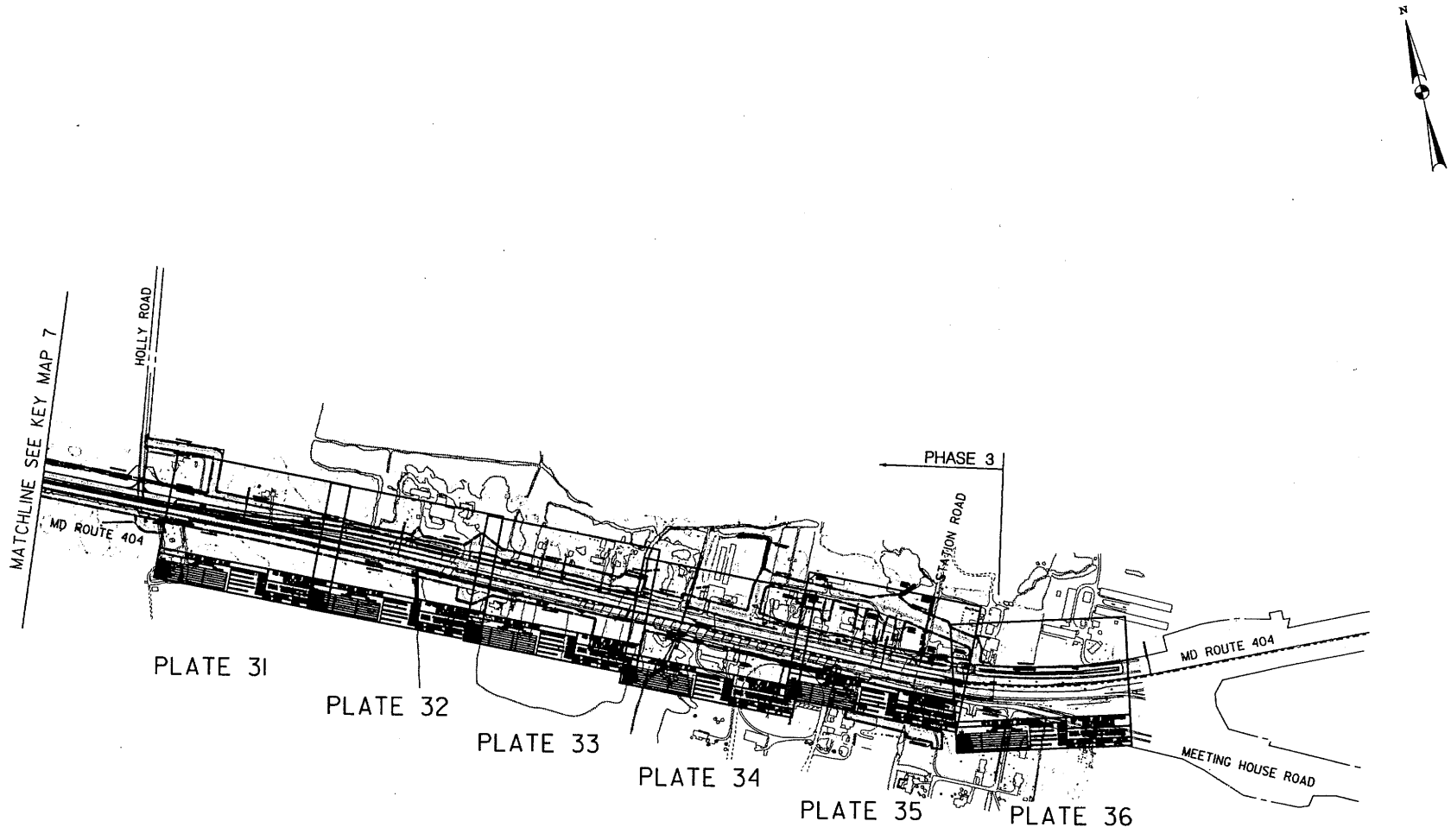

MD ROUTE 404 DUALIZATION

EAST OF U.S. ROUTE 50
TO THE DENTON BYPASS

SHA *Maryland Department of Transportation*
State Highway Administration

DATE: OCTOBER 2007	REVISION DATE: MARCH 2008
SCALE: 1" = 1000'	KEY MAP 8 OF 8