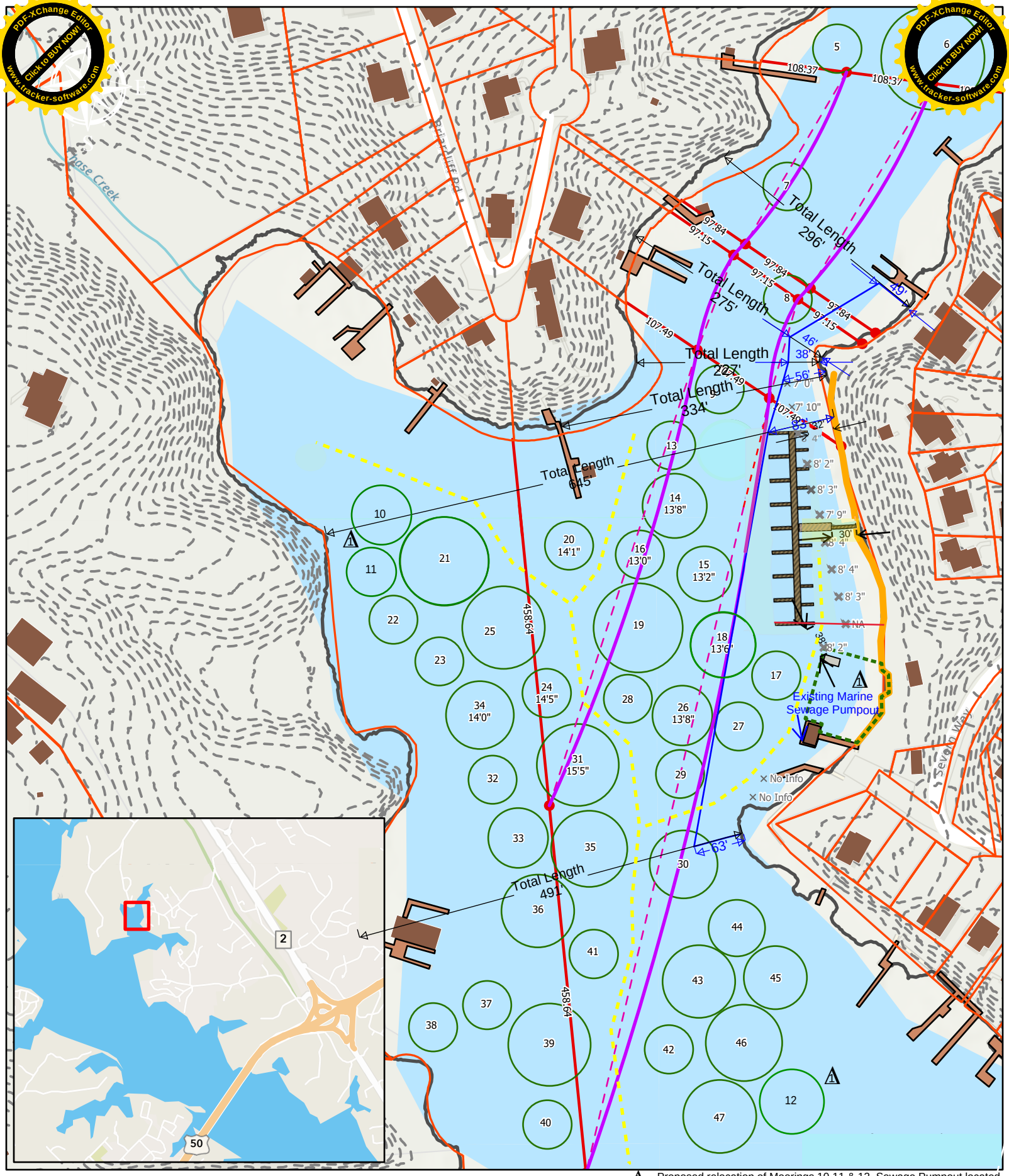

Pines on Severn Pier
(Proposed)

0 50 100 200 300 400 500
Feet

- Proposed relocation of Moorings 10,11 & 12, Sewage Pumpout located
- Pilings (existing)
- Curved Edge Lines (estimated)
- Straight Edge Lines (estimated)
- MooringField
- SwimPlatform
- Swim Area
- Pines Bulkhead
- Proposed Navigation Channels.
- Parcels
- Piers (existing)
- Buildings
- Shoreline (0' contour)
- Five Foot Contours
- Pines Pier (proposed)
- Marina Basin

GEOSPATIAL DATA GDS CONSULTING SERVICES

ALL DOCKS TO BE BUILT USING HEAVY DUTY CONSTRUCTION WITH 20"±1" FREEBOARD

NOTES:
1. HEAVY DUTY FRAMING .60 CCA TREATMENT
2. UTILITY CUT OUTS
3. SPLICED CONNECTION MAINS RIGID CONNECTION FINGERS HEAVY CORNERS CONNECTIONS ON ALL 4'x26' FINGERS
4. STEEL TUBE BRACING IN FINGERS
5. 16" FLOAT @ 60% MAIN 16" FLOAT @ 65% FINGER
6. 2"x6" PINE DECKING #10x3" STAINLESS STEEL SCREWS
7. 4 PLANK PANEL LOCATED EVERY 10'-12'
8. 10" CLEAT
9. SIDE TYPE BUMPER (GRAY) SCREW FASTENED 6" O.C. CORNER BUMPER (BLACK)
10. 12"-14" TIMBER PILE
11. 4 ROLLER PILE GUIDE
12. $\frac{1}{4}$"x6"x4" ALUMINUM WEAR PLATE FOR GANGWAY LANDING
13. PINES ON THE SEVERN

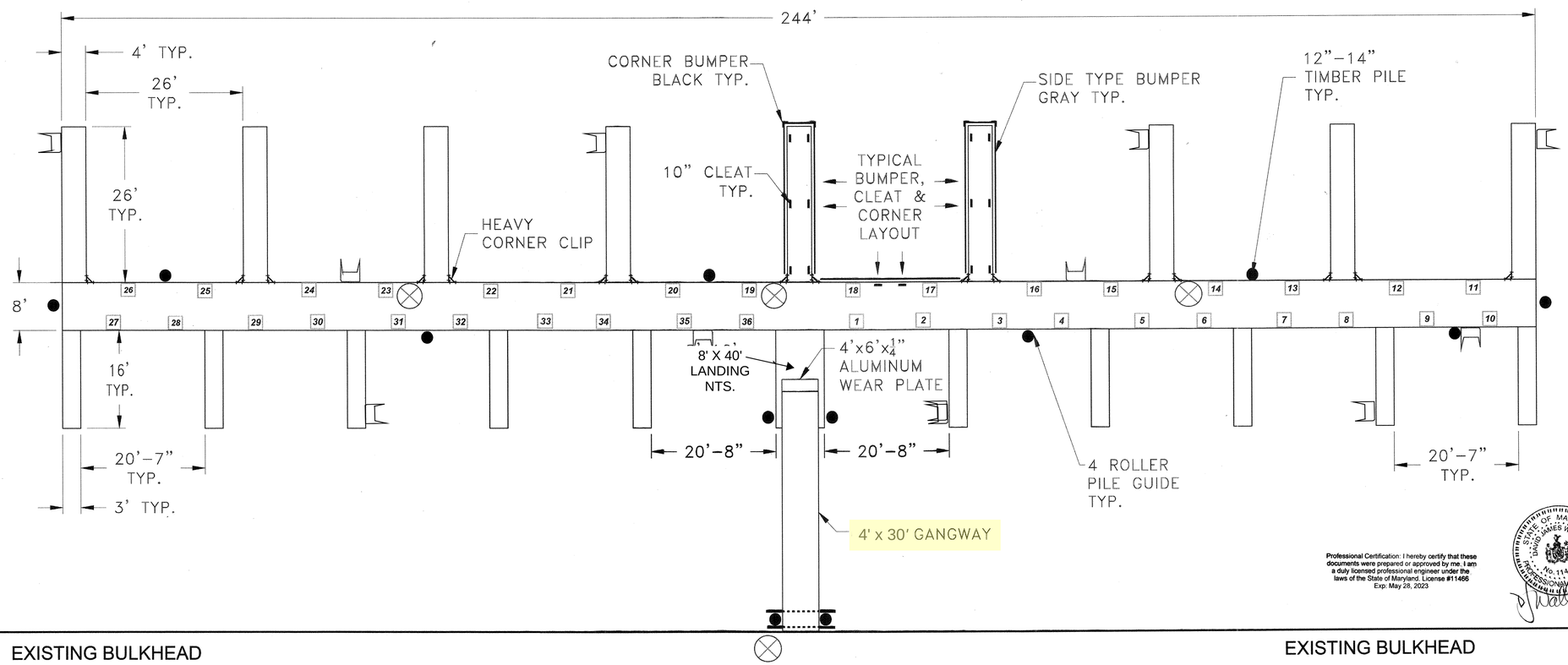

Professional Certification: I hereby certify that these documents were prepared or approved by me, I am a duly licensed professional engineer under the laws of the State of Maryland. License #11466 Exp: May 28, 2023

STATE OF MARYLAND DAVID JAMES WALLACE No. 11466 PROFESSIONAL ENGINEER

2/8/23

KEY
- Boarding Ladder
- Personal Flotation Device
- 36 Slip Number

APPROVED FOR CONSTRUCTION: _____ DATE: _____
By signing and dating this document I authorize Meeco Sullivan to begin engineering, material procurement and fabrication of all contract elements identified hereon. Any subsequent changes may result in additional fees.

MEECO SULLIVAN
THE MARINA COMPANY
P.O. BOX 639
3 CHANCELLOR LANE
WARWICK, N.Y. 10990
PHONE: (845) 986-7377
FAX: (845) 986-8531
EMAIL: DOCKS@MEECOSULLIVAN.COM
WEBSITE: WWW.MEECOSULLIVAN.COM

PROJECT:
PINES ON THE SEVERN
ARNOLD, MD

DRAWING TITLE:
APPROVAL LAYOUT

GENERAL NOTES:

NO.	REVISION	BY	DATE
1	REVISED LOCATION OF THE GANGWAY & LANDING	GK	5.4.22

SCALE: 1"=10'
DATE: 7.30.21
DRAWN BY: G.D.K
APPROVED BY:
PROJECT #:

SHEET #
AL1

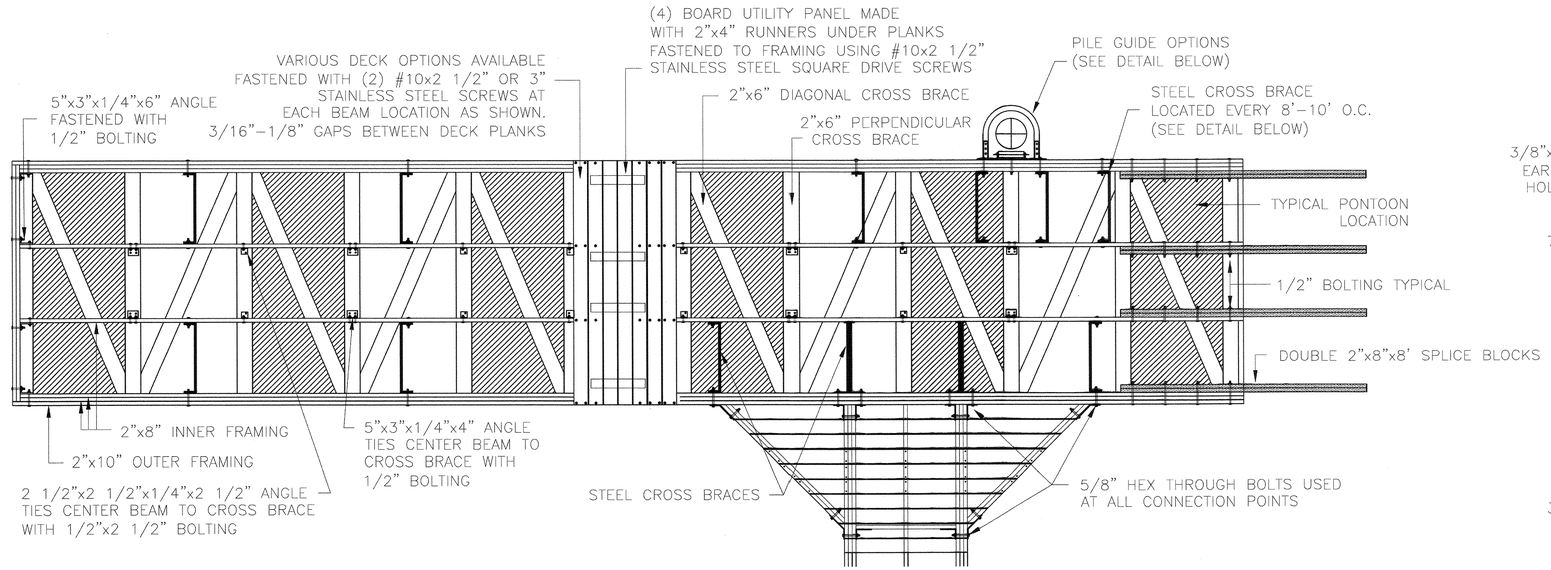

PLAN VIEW/ TYPICAL MAIN WALKWAY SECTION

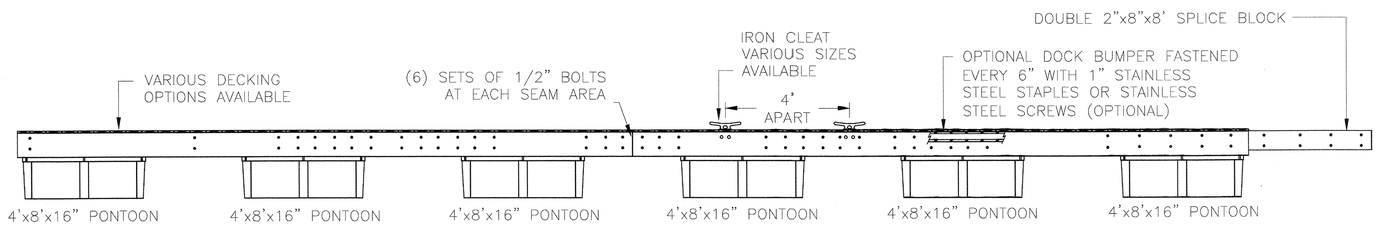

SIDE ELEVATION/ TYPICAL MAIN WALKWAY SECTION

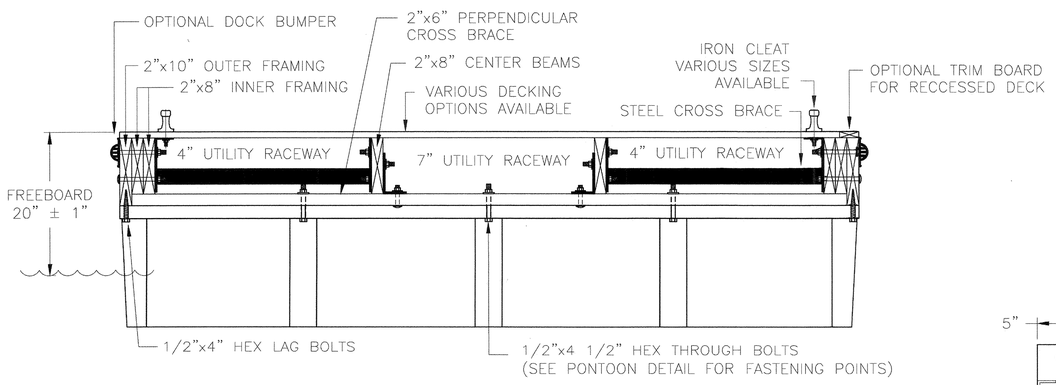

SECTION VIEW/ TYPICAL MAIN WALKWAY SECTION

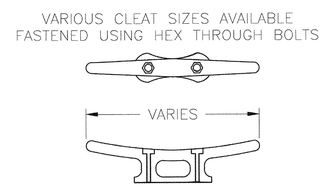

CLEAT DETAIL

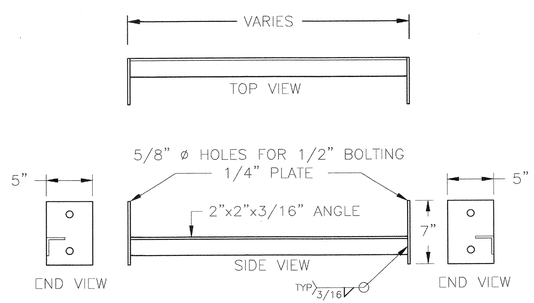

STEEL CROSS BRACE

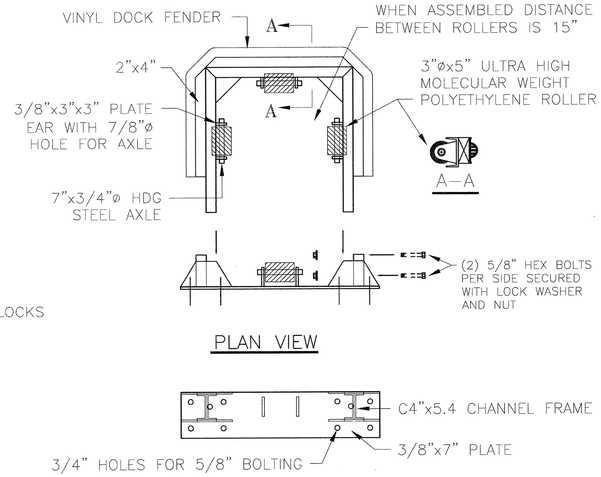

PLAN VIEW

4 ROLLER REMOVABLE PILE GUIDE

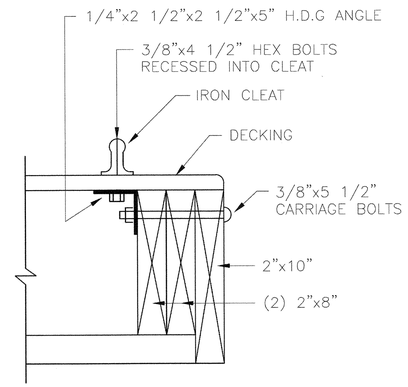

CLEAT CONNECTION DETAIL

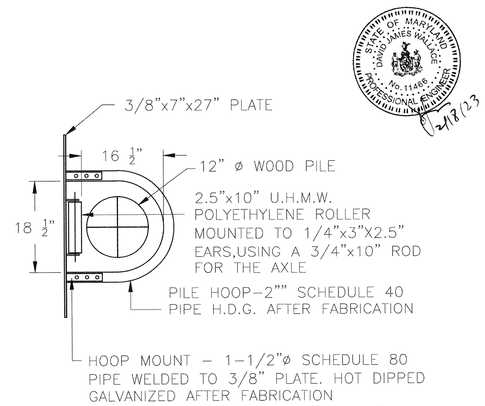

2" HOOP & ROLLER PILE GUIDE

STATE OF MARYLAND DAVID JAMES WALTON No. 11466 PROFESSIONAL ENGINEER
12/8/23

MEECO SULLIVAN
THE MARINA COMPANY

P.O. BOX 639, 3 CHANCELLOR LANE
WARWICK, N.Y. 10990

PHONE: (845) 986-7377
FAX: (845) 986-8531
E-MAIL: DOCKS@SULLFLOAT.COM
WEBSITE: WWW.SULLFLOAT.COM

PROJECT:

DRAWING TITLE:

TYPICAL MAIN WALKWAY SECTION & DETAILS

GENERAL NOTES:

MATERIAL SPECIFICATIONS

1. ALL STEEL & HARDWARE TO BE HOT DIPPED GALVANIZED TO ASTM A123.
2. VARIOUS DECKING OPTIONS AVAILABLE.
3. ALL OUTER FRAMING LUMBER TO BE GRADE #1 SOUTHERN YELLOW PINE, S4S TREATED TO .60lb P.C.F. RETENTION, CCA PRESERVATIVE.
4. ALL INNER FRAMING LUMBER TO BE GRADE #2 OR BETTER SOUTHERN YELLOW PINE, S4S TREATED TO .60lb P.C.F. RETENTION, CCA PRESERVATIVE.
5. FLOTATION TO BE EXPANDED POLYSTYRENE ENCASED IN NOMINAL .150 WALL POLYETHYLENE SHELL, USACOE APPROVED, RESISTANT TO FROZEN ICE, ULTRAVIOLET LIGHT & EXPOSURE TO PETROLEUM PRODUCTS.
6. ALL BOLTS, NUTS AND WASHERS SHALL BE HOT DIPPED GALVANIZED ACCORDING TO ASTM A153 & FABRICATED ACCORDING TO ASTM 307.

NO.	REVISION	BY	DATE

SCALE: N.T.S.
DATE:
DRAWN BY: W.W.S
APPROVED BY:
PROJECT #:

SHEET #

SDM

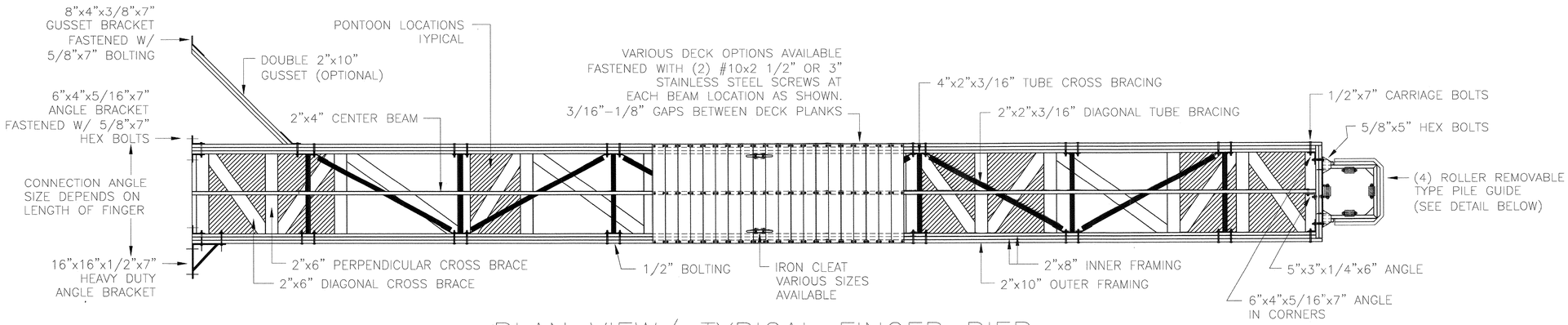

PLAN VIEW/ TYPICAL FINGER PIER

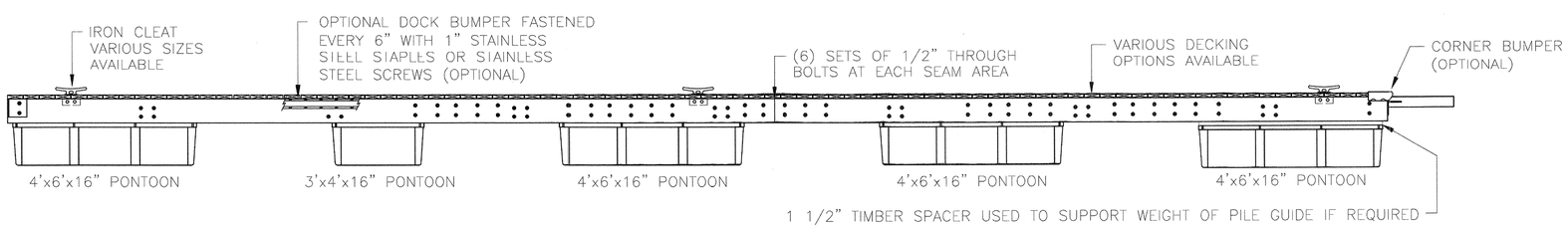

SIDE ELEVATION/ TYPICAL FINGER PIER

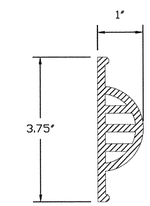

DOCK BUMPER

MODEL: DIMEX 5007 SIDE TYPE
COLOR: WHITE OR BLACK

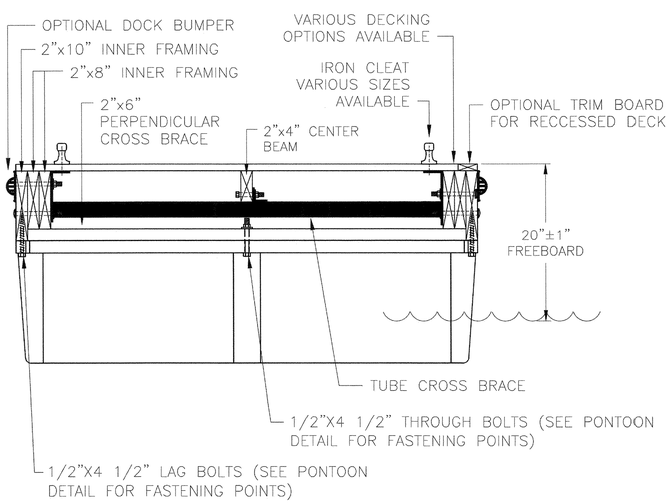

CROSS SECTION/ TYPICAL FINGER PIER

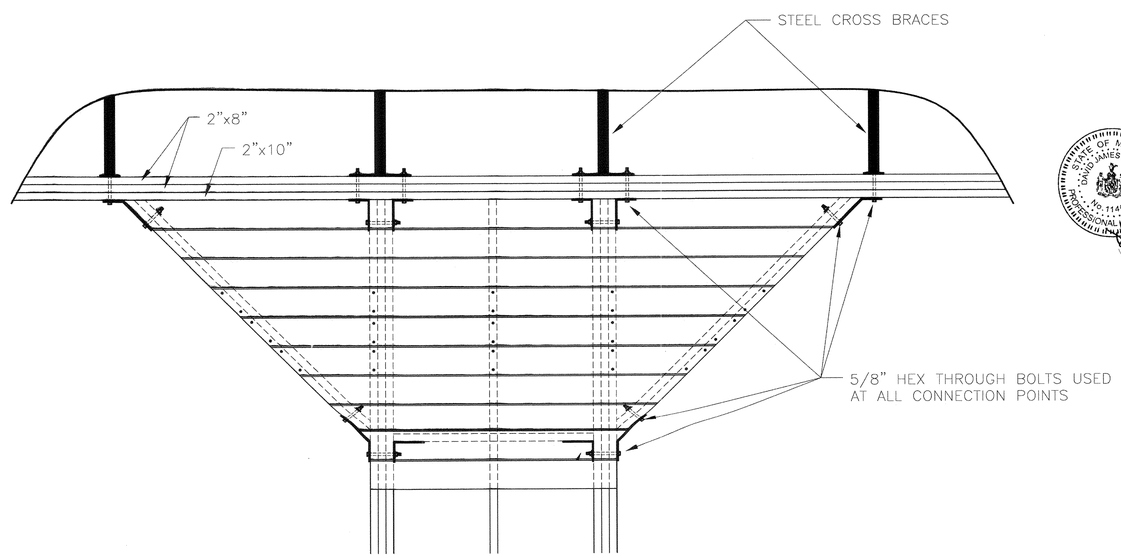

FINGER & GUSSET CONNECTION DETAIL

MEECO SULLIVAN
THE MARINA COMPANY

P.O. BOX 639, 3 CHANCELLOR LANE
WARWICK, N.Y. 10990

PHONE: (845) 986-7377
FAX: (845) 986-8531
E-MAIL: DOCKS@SULLFLOAT.COM
WEBSITE: WWW.SULLFLOAT.COM

PROJECT:

DRAWING TITLE:

TYPICAL FINGER PIER & DETAILS

GENERAL NOTES:

MATERIAL SPECIFICATIONS

1. ALL STEEL & HARDWARE TO BE HOT DIPPED GALVANIZED TO ASTM A123.
2. VARIOUS DECKING OPTIONS AVAILABLE.
3. ALL OUTER FRAMING LUMBER TO BE GRADE #1 SOUTHERN YELLOW PINE, S4S TREATED TO .60lb P.C.F. RETENTION, CCA PRESERVATIVE.
4. ALL INNER FRAMING LUMBER TO BE GRADE #2 OR BETTER SOUTHERN YELLOW PINE, S4S TREATED TO .60lb P.C.F. RETENTION, CCA PRESERVATIVE.
5. FLOTATION TO BE EXPANDED POLYSTYRENE ENCASED IN NOMINAL .150 WALL POLYETHYLENE SHELL, USACOE APPROVED, RESISTANT TO FROZEN ICE, ULTRAVIOLET LIGHT & EXPOSURE TO PETROLEUM PRODUCTS.
6. ALL BOLTS, NUTS AND WASHERS SHALL BE HOT DIPPED GALVANIZED ACCORDING TO ASTM A153 & FABRICATED ACCORDING TO ASTM 307.

REVIEW COMMENT CLARIFICATION

The distance between the bottom of the finger pier float and the bottom of the creek bed at the shallowest locations on the pier is approximately 4'-2".

NO.	REVISION	BY	DATE

STATE OF MARYLAND · DAVID JAMES WALLACE · No. 11486 · PROFESSIONAL ENGINEER

2/18/23

SCALE: N.T.S.	SHEET #
DATE:	
DRAWN BY: W.W.S	
APPROVED BY:	
PROJECT #:	SDF

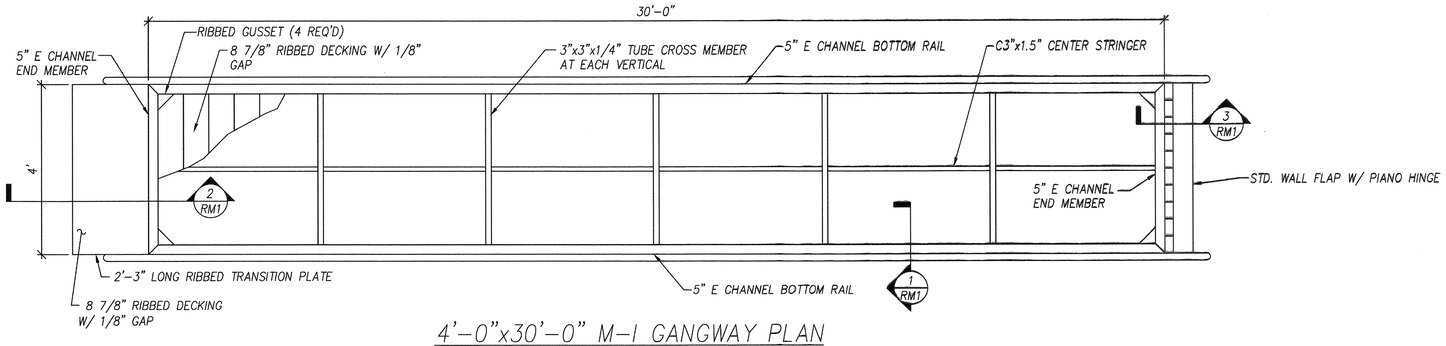

4'-0"x30'-0" M-I GANGWAY PLAN

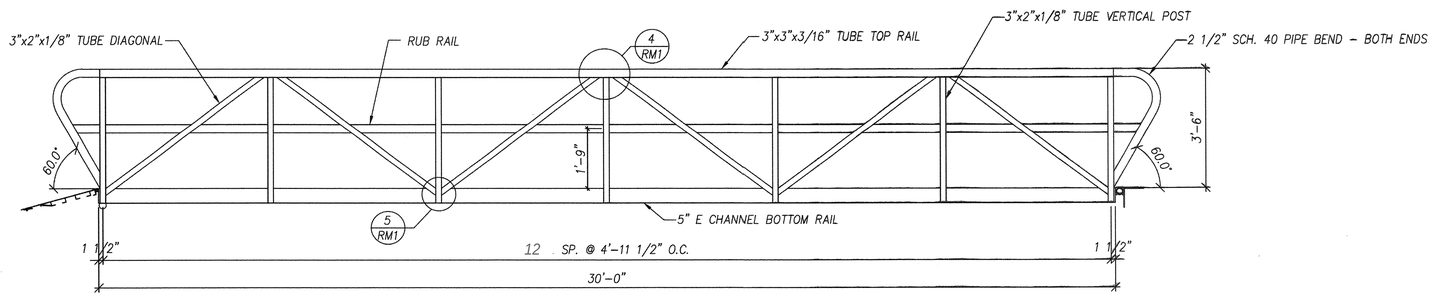

4'-0"x30'-0" M-I GANGWAY ELEVATION

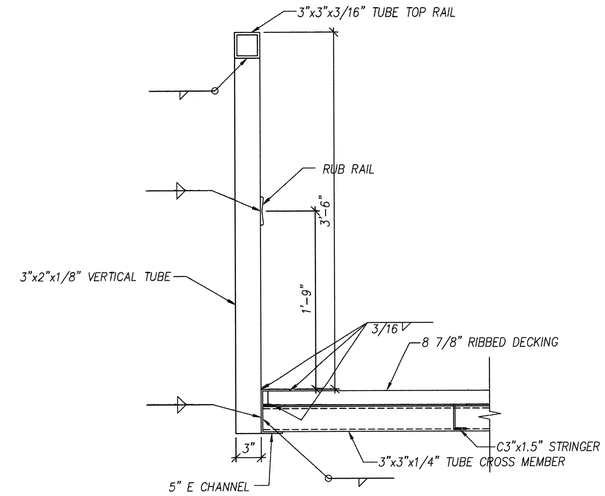

1 RM1 SECTION

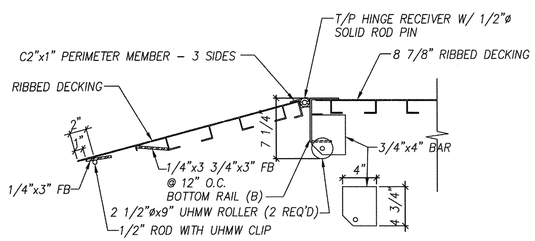

2 RM1 SECTION

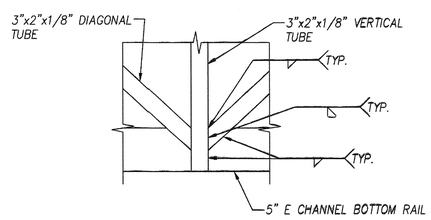

5 RM1 SECTION

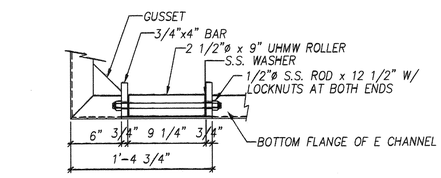

ROLLER END BOTTOM VIEW

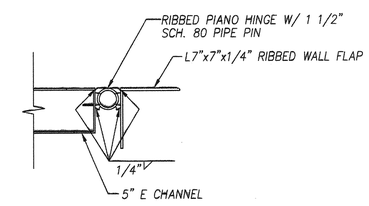

3 RM1 SECTION

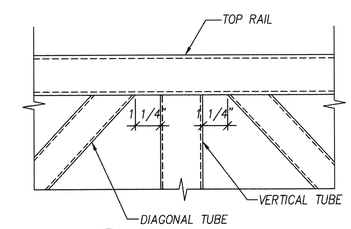

4 RM1 SECTION

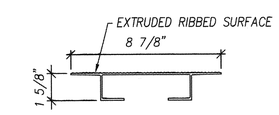

8 7/8" RIBBED DECKING

MEECO SULLIVAN
THE MARINA COMPANY

P.O. BOX 639, 3 CHANCELLOR LANE
WARWICK, N.Y. 10990

PHONE: (845) 986-7377
FAX: (845) 986-8531
E-MAIL: DOCKS@SULLFLOAT.COM
WEBSITE: WWW.SULLFLOAT.COM

PROJECT:

DRAWING TITLE:

4'x30'
ALUMINUM GANGWAY

GENERAL NOTES:

1. DESIGN LIVE LOAD = 90 PSF
2. ALL ALUMINUM 6061-T6
3. ALL FASTENERS ASTM F593 TYPE 304 STAINLESS STEEL
4. 100% MIG WELDED CONSTRUCTION WITH 5356 ALLOY FILLER
5. ALL WELDS 3/16" FILLET TYP. UNLESS NOTED OTHERWISE

NO.	REVISION	BY	DATE

STATE OF MARYLAND · DAVID JAMES WALLACE · No. 11466 · PROFESSIONAL ENGINEER

7/12/13

SCALE: N.T.S.	SHEET #
DATE:	M1R
DRAWN BY: R.V.N	
APPROVED BY:	
PROJECT #:	