GBBP BALTIMORE NEW DOLPHIN

4701 NEWGATE AVE., BALTIMORE, MD 21224

FOR

GOLD BOND BUILDING PRODUCTS, LLC

2301 S. NEWKIRK ST., BALTIMORE, MD 21224

NAB-2021-61797
Revised 2/2/22
Sheet 1 of 15

Sheet List Table	
Sheet Number	Sheet Title
CS-1	COVER SHEET
GN-1	GENERAL NOTES 1
GN-2	GENERAL NOTES 2
GA-1	EXISTING SITE PLAN
GA-2	PROPOSED SITE PLAN
GA-3	PROPOSED DOLPHIN AND WALKWAY
P-1	PROPOSED PILE REPAIR PLAN 1
P-2	PROPOSED PILE REPAIR PLAN 2
P-3	PROPOSED PILE REPAIR PLAN 3
P-4	PROPOSED PILE PLAN
GS-1	GENERAL STEEL DETAILS
S-01	PROPOSED DOLPHIN PLAN, SECTIONS AND DETAILS
S-02	BREASTING DOLPHIN REINFORCEMENT DETAILS
S-03	WALKWAY FRAMING PLAN, SECTIONS AND DETAILS
S-04	PILE ENCASEMENT REPAIR DETAILS

VICINITY MAP

NORTH

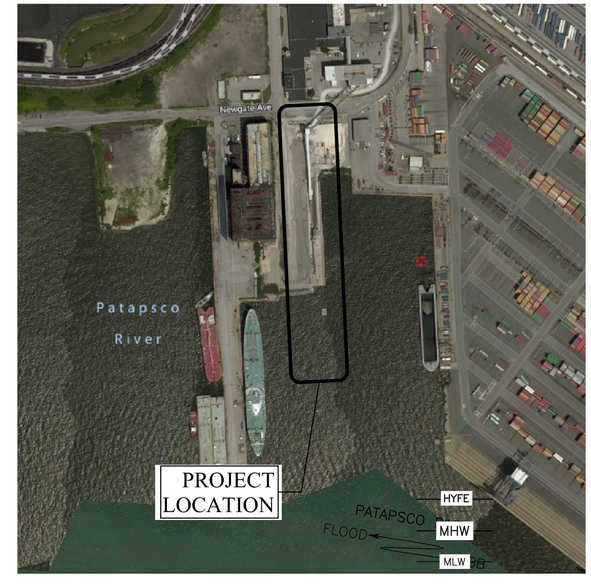

LOCATION MAP

ISSUED FOR PERMIT REVISION
DATE: 02/02/22

URBAN PROJECT NO. 2020610213.000

URBAN ENGINEERS
Urban Engineers, INC.
530 Walnut Street
Philadelphia, PA 19106
o. 215.922.8080

SEAL

BY:

DATE:

REV	DATE	DESCRIPTION	BY	CK'D	APP'D
1	02/02/22	ISSUED FOR PERMIT REVISION	MKP	PB	MGW
0	06/16/21	ISSUED FOR PERMIT	MKP	PB	MGW

GOLD BOND BUILDING PRODUCTS, LLC
GBBP BALTIMORE NEW DOLPHIN
BALTIMORE, MD

COVER SHEET

SCALE: AS NOTED
DATE: 02/02/22
DESIGN BY: MKP
APPROVED BY: MGW
DRAWN BY: FYC
CHECKED BY: SMM
PROJECT NO: 2020610213.000
SHEET NUMBER: CS-1
SHT. NO.: SHT 1 OF TOT SH
DRAWING FILE NO.: CS-1 COV... .DWG
REV. NO.: 1

T:\PROJECTS\ON-GOING\2020 PROJECTS\2020610213.000 - NGC BALTIMORE NEW DOLPHIN\WORK\DRAWINGS\WORKING DRAWINGS\CURRENT\CS-1 COVER SHEET.DWG

DATE PRINTED: 2/3/2022 10:58:53 AM

ISSUED FOR PERMIT

GENERAL NOTES

1. DESIGN AND CONSTRUCTION SHALL COMPLY WITH ALL APPLICABLE STATE AND LOCAL CODES AND STANDARDS, THE PROJECT SPECIFICATIONS, AND DRAWINGS. NOTES ON DRAWINGS SHALL TAKE PRECEDENCE OVER PROJECT SPECIFICATIONS. SPECIFIC NOTES ON DETAIL DRAWINGS TAKE PRECEDENCE OVER GENERAL NOTE DRAWINGS. STATE AND LOCAL CODES SHALL TAKE PRECEDENCE OVER PROJECT SPECIFICATIONS AND NOTES ON DRAWINGS.

2. THE CONTRACTOR SHALL FIELD VERIFY ALL DIMENSIONS AND EXISTING CONDITIONS PRIOR TO MOBILIZING. ALL EXISTING & PROPOSED DIMENSIONS AND ELEVATIONS SHOWN ON THE DRAWINGS SHALL BE VERIFIED BY THE CONTRACTOR PRIOR TO ANY FABRICATION OR ERECTION. NOTIFY THE ENGINEER OF ANY DISCREPANCIES IMMEDIATELY.

3. THE CONTRACTOR SHALL REMOVE FROM THE SITE ALL WASTE MATERIAL, DEMOLISHED MATERIAL AND DEBRIS GENERATED DURING THE COURSE OF THE WORK, U.N.O. DISPOSAL OF ALL GENERATED WASTE MATERIAL, DEMOLISHED MATERIAL AND DEBRIS IS THE CONTRACTOR'S RESPONSIBILITY. DISPOSE OF ALL MATERIAL IN ACCORDANCE WITH APPLICABLE FEDERAL, STATE AND LOCAL RULES AND REGULATIONS.

4. THE CONTRACTOR SHALL PLACE SEDIMENT CONTROL DEVICES, BOOMS, TARPAULINS, FLOATS, STAGING, TURBIDITY BARRIERS, AND OTHER DEVICES AS NECESSARY TO PREVENT CONSTRUCTION MATERIALS FROM ENTERING THE WATER AND LEAVING THE IMMEDIATE VICINITY OF THE SITE. THE CONTRACTOR SHALL BE RESPONSIBLE FOR CLEANUP OF ALL MATERIALS.

5. THE CONTRACTOR SHALL ABIDE BY ALL APPLICABLE ENVIRONMENTAL PROTECTION STANDARDS, CODES, LAWS, REGULATIONS, AND PERMITS.

6. THE CONTRACTOR SHALL CONDUCT HIS OPERATIONS SO AS TO NOT INTERFERE WITH, OR BE DETRIMENTAL TO, VESSEL AND VEHICULAR TRAFFIC DURING THE COURSE OF THE WORK.

7. ALL STRUCTURES ARE DESIGNED TO BE SELF–SUPPORTING AND STABLE AFTER ERECTION IS FULLY COMPLETE. IT IS THE RESPONSIBILITY OF THE CONTRACTOR TO DETERMINE ERECTION PROCEDURES AND SEQUENCE AND TO ENSURE THE SAFETY OF THE STRUCTURE AND ITS COMPONENT PARTS DURING ERECTION. THIS INCLUDES THE ADDITION OF WHATEVER SHORING, SHEETING, TEMPORARY BRACING, GUYS OR TIE DOWNS THAT MAY BE NECESSARY. SUCH MATERIAL SHALL REMAIN THE CONTRACTOR'S PROPERTY AFTER COMPLETION OF THE PROJECT.

8. THE CONTRACTOR SHALL FOLLOW ALL APPLICABLE SAFETY CODES AND REGULATIONS DURING ALL PHASES OF CONSTRUCTION.

CONCRETE AND REINFORCING STEEL

1. ALL CONCRETE WORK SHALL COMPLY WITH THE RECOMMENDATIONS OF ACI 301 AND ACI 318, UNLESS OTHERWISE SPECIFIED.

2. FOLLOW THE REQUIREMENTS OF ACI 306 WHEN POURING CONCRETE IN COLD WEATHER.

3. CAST–IN–PLACE CONCRETE STRENGTH SHALL BE A MINIMUM OF 4500 PSI AT 28 DAYS, U.N.O.

4. NONMETALLIC NON–SHRINK GROUT STRENGTH SHALL BE A MINIMUM OF 5000 PSI AT 28 DAYS, U.N.O.

5. THE CONTRACTOR SHALL MAINTAIN PROPER CURING PROCEDURES FOR A MINIMUM OF 7 DAYS.

6. ALL DETAILING, FABRICATION AND ERECTION OF REINFORCING STEEL SHALL CONFORM TO THE ACI MANUAL OF STANDARD PRACTICE FOR DETAILING REINFORCED CONCRETE STRUCTURES, ACI 315.

7. REINFORCING STEEL FOR CAST–IN–PLACE CONCRETE SHALL CONFORM TO ASTM A 615, GR 60, EXCEPT REINFORCING STEEL TO BE WELDED SHALL CONFORM TO ASTM A 706.

8. MINIMUM CONCRETE COVER FOR ALL REINFORCING SHALL BE 2 INCHES, U.N.O.

9. ALL CONSTRUCTION JOINTS SHALL BE KEYED, U.N.O. JOINTS SHALL BE PROVIDED AS NECESSARY AT LOCATIONS, AND USING METHODS, APPROVED BY THE ENGINEER.

10. ALL REINFORCING BAR SPLICES SHALL BE TENSION LAP SPLICES, IN ACCORDANCE WITH ACI 318, U.N.O.

11. CHAMFER ALL EXTERNAL EXPOSED CORNERS OF CONCRETE WITH A 1 INCH, 45–DEGREE CHAMFER, U.N.O.

12. WELDING OF REINFORCING STEEL SHALL BE PERFORMED IN ACCORDANCE WITH AWS D1.4.

STRUCTURAL AND MISCELLANEOUS STEEL

1. ALL STEEL WORK SHALL BE PERFORMED IN ACCORDANCE WITH THE LATEST EDITION OF AISC SPECIFICATIONS FOR THE DESIGN, FABRICATION AND ERECTION OF STRUCTURAL STEEL. DESIGN, FABRICATION, AND ERECTION ARE TO BE GOVERNED BY THE LATEST REVISIONS OF:
   A. AISC STEEL CONSTRUCTION MANUAL
   B. AISC CODE OF STANDARD PRACTICE
   C. AWS D1.1 STRUCTURAL WELDING CODE
   D. RCSC SPECIFICATIONS FOR STRUCTURAL JOINTS USING HIGH STRENGTH BOLTS

2. STRUCTURAL AND MISCELLANEOUS STEEL MATERIALS SHALL CONFORM TO THE FOLLOWING, U.N.O.:

WIDE FLANGE SHAPES:	ASTM A 992, GRADE 50
HP PILES:	ASTM A 572, GRADE 50
PIPE PILES:	ASTM A 252, GRADE 3, Fy = 50 KSI
PIPE:	ASTM A 53, GRADE B, TYPE S
HOLLOW STRUCTURAL SECTIONS (HSS):	ASTM A 500
OTHER SHAPES, BARS AND PLATES:	ASTM A 36, Fy = 36 KSI
HEADED BOLTS:	ASTM A 325
ANCHOR BOLTS:	ASTM A 449
STEEL SHEET PILE (SSP):	ASTM A 572, GRADE 50
NUTS:	ASTM A 563
WASHERS:	ASTM F 436

3. IF OVERSIZED HOLES ARE USED, WASHERS MUST BE EXTRA THICK, AND MAY REQUIRE WELDING.

4. ALL MISCELLANEOUS METALS INCLUDING BOLTS, WASHERS, NUTS, ANGLES, INSERTS, PLATES, AND OTHER FABRICATIONS SHALL BE HOT–DIP GALVANIZED IN ACCORDANCE WITH THE REQUIREMENTS OF ASTM A 123 AND/OR ASTM A 153, AS APPLICABLE AFTER FABRICATION, UNLESS OTHERWISE NOTED OR SPECIFIED. STAINLESS STEEL ITEMS SHALL NOT BE GALVANIZED.

5. FIELD TREAT DAMAGED GALVANIZED FINISH WITH TWO COATS OF HIGH ZINC DUST OXIDE PAINT, COLD GALVANIZING COMPOUNDS OR APPROVED EQUAL. IN ADDITION, ALL EXPOSED THREADED SURFACES SHALL BE CLEANED AND PAINTED WITH TWO COATS OF HIGH ZINC DUST OXIDE PAINT AFTER INSTALLATION OF THE NUT(S).

6. THE TYPE, SIZE, SPACING, AND ALIGNMENT OF CONNECTING HARDWARE SHOWN ARE CRITICAL AND MUST BE MAINTAINED.

7. ALL WELDING SHALL CONFORM TO THE LATEST EDITION OF AWS D.1.1, U.N.O. ALL WELDS SHALL BE MADE WITH E70XX ELECTRODES, UNLESS HIGHER STRENGTH ELECTRODES ARE REQUIRED BY AWS D1.1. GENERALLY, ELECTRODES SHALL BE NEW OR BAKED AT THE START OF EACH SHIFT. FOLLOW THE ATMOSPHERIC EXPOSURE LIMITS AND BAKING REQUIREMENTS OF CLAUSE 5 OF AWS D1.1.

8. WELDING PERSONNEL AND PROCEDURES ARE TO BE QUALIFIED PER AWS D1.1, U.N.O.

9. MINIMUM SIZE OF FILLET WELDS SHALL BE 5⁄16" U.N.O.

10. WHEN THE 'ALL–AROUND' WELDING SYMBOL IS USED AT AN END CONNECTION OF A ROLLED SHAPE, THE CONTRACTOR SHALL TERMINATE THE WELD AT EACH OF THE FLANGE EDGES, AND ONE WELD THICKNESS AWAY FROM EACH INTERSECTION OF THE WEB AND FLANGE, U.N.O.

11. DOWELS, BOLTS, REINFORCEMENT OR OTHER STEEL TO BE EMBEDDED IN CONCRETE SHALL BE INSTALLED USING HILTI HIT–HY 200 EPOXY, U.N.O.

SURVEY NOTES:

1. LAND SURVEY INFORMATION SHOWN ON THESE PLAN IS BASED ON A FIELD SURVEY, WHICH WAS CONDUCTED BY NAVARRO & WRIGHT CONSULTING ENGINEERS. DURING THE MONTH OF OCTOBER, 2020.

2. DATUM:
   HORIZONTAL = MARYLAND STATE PLANE COORDINATE SYSTEM, SOUTH ZONE, NAD83
   VERTICAL = MLW (SURVEY WAS CONDUCTED IN NAVD88 VERTICAL DATUM AND CONVERTED TO MLW DATUM IN ACCORDANCE WITH ELEVATION LEGEND).

3. HYDROGRAPHIC SURVEY INFORMATION SHOWN ON THESE PLANS IS BASED ON A HYDROGRAPHIC SURVEY, WHICH WAS CONDUCTED BY GAHAGAN & BRYANT ASSOCIATES, INC ON NOVEMBER 18, 2020.

CIVIL/STRUCTURAL ABBREVIATIONS, U.N.O.

AASHTO	=	AMERICAN ASSOCIATION OF STATE HIGHWAY AND TRANSPORTATION OFFICIALS
ACI	=	AMERICAN CONCRETE INSTITUTE
AISC	=	AMERICAN INSTITUTE OF STEEL CONSTRUCTION
ALT	=	ALTERNATE
ANSI	=	AMERICAN NATIONAL STANDARDS INSTITUTE
APPROX	=	APPROXIMATE
ARCH.	=	ARCHITECTURAL
ASTM	=	AMERICAN SOCIETY FOR TESTING AND MATERIALS
AVG	=	AVERAGE
AWS	=	AMERICAN WELDING SOCIETY
B.O.P.	=	BOTTOM OF PIPE
B/B	=	BACK TO BACK
C/C	=	CENTER TO CENTER
CF	=	CUBIC FEET
C.I.P.	=	CAST IN PLACE
CJ	=	CONSTRUCTION JOINT
CLR	=	CLEAR
CO	=	CLEAN OUT
CONC	=	CONCRETE
CONST	=	CONSTRUCTION
CONT	=	CONTINUOUS
CTE	=	COAL TAR EPOXY
CY	=	CUBIC YARD
D	=	DEPTH
D/R	=	DOWNRIVER
DEG	=	DEGREES
DETL'S	=	DETAILS
DIA	=	DIAMETER
DIST	=	DISTANCE
DWG	=	DRAWING
DWT	=	DEAD WEIGHT TONNAGE
E	=	EAST
EA	=	EACH
EF	=	EACH FACE
EHW	=	EXTREME HIGH WATER
EJ	=	EXPANSION JOINT
EL/ELEV.	=	ELEVATION
ELEC	=	ELECTRICAL
EW	=	EACH WAY
EXIST.	=	EXISTING
EXT	=	EXTERIOR
EXPN	=	EXPANSION
FDN.	=	FOUNDATION
FPS	=	FEET PER SECOND
FRP	=	FIBERGLASS REINFORCED PLASTIC
FS	=	FAR SIDE
FT	=	FEET
FY	=	YIELD STRESS
GALV	=	GALVANIZED
GR	=	GRADE
GRTNG	=	GRATING
GUSS	=	GUSSET
H	=	HEIGHT
HAT	=	HIGHEST ASTRONOMICAL TIDE
HTL	=	HIGH TIDE LINE
HVY	=	HEAVY
I	=	I BEAM
I/S	=	INSHORE
INV	=	INVERT
JT	=	JOINT
kg	=	KILOGRAMS
KIP	=	KILOPOUND
kN	=	KILONEWTONS
L	=	ANGLE
LAT	=	LOWEST ASTRONOMICAL TIDE OR LATITUDE
LB	=	POUND
LF	=	LINEAR FEET
LG	=	LONG
LLV	=	LONG LEG VERTICAL
LOA	=	LENGTH OVERALL
LONG.	=	LONGITUDE
LT	=	LONG TON
m	=	METERS
mm	=	MILLIMETERS
MAX	=	MAXIMUM
MEA	=	MEASURED
MHHW	=	MEAN HIGHER HIGH WATER
MHW	=	MEAN HIGH WATER
MIN	=	MINIMUM
MISC	=	MISCELLANEOUS
MLLW	=	MEAN LOWER LOW WATER
MLW	=	MEAN LOW WATER
MPa	=	MEGAPASCALS
MPH	=	MILES PER HOUR
MSL	=	MEAN SEA LEVEL
N	=	NEWTON OR NORTH
NAVD–88	=	NORTH AMERICAN VERTICAL DATUM OF 1988
NGVD–29	=	NATIONAL GEODETIC VERTICAL DATUM OF 1929
NTP	=	NOTICE TO PROCEED
NIC	=	NOT IN CONTRACT
NS	=	NEAR SIDE
NTS	=	NOT TO SCALE
NO.	=	NUMBER
O.C.	=	ON CENTER
O/S	=	OUTSHORE
OSHA	=	OCCUPATIONAL SAFETY AND HEALTH ADMINISTRATION
PSI	=	POUNDS PER SQUARE INCH
PVC	=	POLYVINYL CHLORIDE
R/F	=	REINFORCING
R.C.P.	=	REINFORCED CONCRETE PIPE
REQ'D	=	REQUIRED
S	=	SOUTH
SCH	=	SCHEDULE
SECT	=	SECTION
SHT	=	SHEET
SIM	=	SIMILAR
SPEC	=	SPECIFICATION
SQ	=	SQUARE
SS	=	STAINLESS STEEL
SSP	=	STEEL SHEET PILE
STL	=	STEEL
STRUC.	=	STRUCTURE
SUPP	=	SUPPORT
SY	=	SQUARE YARD
T, TONNE	=	METRIC TON
TON	=	SHORT TON
T.B.D	=	TO BE DETERMINED
TEMP	=	TEMPORARY
THK	=	THICKNESS
THRU	=	THROUGH
T.O.	=	TOP OF
T.O.C	=	TOP OF CONCRETE
T.O.S	=	TOP OF STEEL
TYP	=	TYPICAL
U.N.O.	=	UNLESS NOTED OTHERWISE
UHMWPE	=	ULTRA HIGH MOLECULAR WEIGHT POLYETHYLENE
U/R	=	UP RIVER
USACE	=	UNITED STATES ARMY CORPS OF ENGINEERS
W/	=	WITH
W	=	WIDTH, WIDE FLANGE BEAM OR WEST
W.P./WP	=	WORK POINT
W.T.	=	WALL THICKNESS
WT	=	WEIGHT
℄	=	CENTER LINE
#	=	NUMBER
%	=	PERCENT
PL	=	PLATE
&	=	AND
@	=	AT
x	=	BY
ø	=	DIAMETER

NAB-2021-61797
Revised 2/2/22
Sheet 2 of 15

ISSUED FOR PERMIT REVISIION
DATE: 02/02/22

Urban Engineers, INC.
1020 Bethlehem Pike
Philadelphia, PA 19116
o. 215.572.8080

SEAL

BY:

DATE:

REV	DATE	DESCRIPTION	BY	CK'D	AP'D
1	02/02/22	ISSUED FOR PERMIT REVISION	MKP	PB	MGW
0	06/16/21	ISSUED FOR PERMIT	MKP	PB	MGW

GOLD BOND BUILDING PRODUCTS, LLC
BALTIMORE, MD

GBBP BALTIMORE NEW DOLPHIN

GENERAL NOTES 1

SCALE: AS NOTED
DESIGN BY: MKP
APPROVED BY: MGW
DATE: 02/02/22
DRAWN BY: FYC
CHECKED BY: SMM
PROJECT NO.: 2020610213.000
SHEET NUMBER: GN-1
SHT. NO.: SHT 1 OF TOT SH
DRAWING FILE NO.: GN-1 GEN... .DWG
REV. NO.: 1

ISSUED FOR PERMIT

DATE PRINTED: 2/3/2022 10:59:00 AM

T:\PROJECTS\ON-GOING\2020 PROJECTS\2020610213.000 - NGC BALTIMORE NEW DOLPHIN\WORK\DRAWINGS\WORKING DRAWINGS\CURRENT\GN-1 GENERAL NOTES.DWG

DESIGN VESSELS

1. LARGEST DESIGN VESSEL CHARACTERISTICS:

MAX. DWT	=	71,405 TONNES
MAX. DISPLACEMENT	=	87.500 TONNES
MAX. DESIGN DISPLACEMENT	=	62,000 TONNES
LOA = 750 FT		
BEAM = 106 FT		
MAX. DESIGN DRAFT (PARTIAL)	=	33 FT
MIN. BALLASTED DESIGN DRAFT	=	22 FT

DESIGN LOADS

1. LIVE LOADS:
   WALKWAY AND DOLPHIN LIVE LOAD = 100 PSF

2. WIND:
   MAXIMUM OPERATING WIND VELOCITY = 50 KNOTS (58 MPH)
   STORM WIND VELOCITY (PERMANENT STRUCTURE ONLY)
   - RISK CATEGORY = II
   - EXPOSURE CATEGORY = C
   - BASE WIND VELOCITY = 115 MPH

3. CURRENT:
   MAX CURRENT VELOCITY = 2.5 KNOTS

4. SEISMIC:
   RISK CATEGORY = II
   SITE CLASS = D
   S_S = 0.129g
   S_1 = 0.052g

FENDERS

1. FENDERS SHALL BE MARITIME INTERNATIONAL 1600 CELL FENDER, GRADE 2, OR APPROVED EQUAL. FENDERS SHALL BE EQUIPPED WITH UHWM-FACED PANELS. THE CONTRACTOR SHALL SUBMIT PROPOSED FENDER SPECIFICATIONS FOR APPROVAL PRIOR TO PROCUREMENT.

2. FENDERS SHALL HAVE THE FOLLOWING RATED PROPERTIES, U.N.O.:
   MINIMUM ENERGY = 755 K-FT
   MAXIMUM REACTION = 400 KIP
   DEFLECTION = 52.5%

3. BERTHING PARAMETERS:
   MAXIMUM BERTHING VELOCITY = 0.50 FT./SEC.
   ABNORMAL IMPACT FACTOR = 1.50
   MAXIMUM BERTHING ANGLE = 3°
   SERVICE TEMPATURE RANGE = 30-100 °F

4. ALL CHAINS, ANCHORAGES, SHACKLES, PANELS AND HARDWARE SHALL BE DESIGNED AND SUPPLIED BY THE FENDER MANUFACTURER. FENDER PANELS SHALL BE THE APPROXIMATE SIZES SHOWN AND SHALL LIMIT HULL PRESSURES TO 20 PSI. THE CONTRACTOR SHALL SUBMIT PROPOSED SHOW DRAWINGS FOR THE ABOVE FOR REVIEW PRIOR TO PROCUREMENT.

PILE TESTING & DRIVE CRITERIA

1. STANDARD PILES SHALL BE DRIVEN TO ACHIEVE THE FOLLOWING ALLOWABLE CAPACITIES:
   1.1. 18"ø x ⅝" PLUMB PILES SHALL BE DRIVEN TO ACHIEVE A 65 TON ALLOWABLE CAPACITY IN COMPRESSION, AND A 38 TON ALLOWABLE CAPACITY IN UPLIFT.
   1.2. 18"ø x ⅝" BATTER PILES SHALL BE DRIVEN TO ACHIEVE A 120 TON ALLOWABLE BEARING CAPACITY IN COMPRESSION, AND A 5 TON ALLOWABLE CAPACITY IN UPLIFT
   1.3. THE MINIMUM FACTORS OF SAFETY ON THESE ALLOWABLE CAPACITIES SHALL BE 2.25 ON COMPRESSION, AND 3.0 ON UPLIFT.

2. THE CONTRACTOR SHALL PERFORM AND SUBMIT THE RESULTS OF DRIVEABILITY ANALYSES BASED ON BORING B-1 OF THE GEOTECH REPORT TO DETERMINE THE SPECIFICATIONS OF THE HAMMER TO BE USED FOR DRIVING STANDARD PILES TO THE REQUIRED ALLOWABLE CAPACITIES. THIS HAMMER WILL BE REVIEWED BY THE ENGINEER PRIOR TO USE.

3. THE CONTRACTOR SHALL PERFORM AND SUBMIT THE RESULTS OF DYNAMIC TESTING AND CAPWAP ANALYSES OF THE TEST PILES INDICATED ON THE DWGS. THE DYNAMIC TESTING SHALL INCLUDE PDA MONITORING DURING INITIAL DRIVE, AND A RESTRIKE TO BE PERFORMED AFTER A MINIMUM OF 48 HOURS.
   3.1. TEST PILES SHALL BE DRIVEN AND TESTED FOR THEIR FULL LENGTHS.
   3.2. THIS TESTING SHALL INFORM THE DEVELOPMENT OF DRIVE CRITERIA TO ACHIEVE THE SPECIFIED ALLOWABLE PILE CAPACITIES IN COMPRESSION AND UPLIFT. THE ENGINEER WILL ISSUE DRIVE CRITERIA BASED ON THE RESULTS FROM THE TEST PILES, WHICH SHALL GOVERN THE DRIVING OF PRODUCTION PILES.
   3.3. PRODUCTION PILES OF EACH TYPE SHALL NOT BE DRIVEN UNTIL THAT TYPE HAS BEEN TESTED AND THE ENGINEER HAS ISSUED DRIVE CRITERIA FOR THAT TYPE.

4. SEE THE TECHNICAL SPECIFICATIONS FOR FURTHER DETAILS ON PILE TESTING REQUIREMENTS.

BOLLARDS

1. BOLLARDS SHALL BE 100 TON CAPACITY, SINGLE BITT STYLE BOLLARDS.

2. ANCHOR BOLTS SHALL BE DESIGNED AND SUPPLIED BY THE MANUFACTURER.

3. SUBMIT PROPOSED BOLLARD AND ANCHOR BOLT SHOP DRAWINGS FOR REVIEW PRIOR TO PROCUREMENT, AND INSTALL BOLLARDS USING THE MANUFACTURER'S RECOMMENDATIONS, AS APPROVED BY THE ENGINEER.

FOUNDATION

1. THE CONTRACTOR SHALL BECOME FAMILIAR WITH THE AVAILABLE SOIL BORING INFORMATION. IF AVAILABLE, THE GEOTECHNICAL INVESTIGATION REPORT FOR THIS PROJECT CAN BE OBTAINED FROM THE OWNER.

2. THE CONTRACTOR SHALL NOTIFY THE ENGINEER OF ANY UNUSUAL SOIL CONDITIONS IMMEDIATELY.

3. THE CONTRACTOR SHALL TAKE CARE WHEN USING HEAVY EQUIPMENT IN THE VICINITY OF EXCAVATED SLOPES. NO WORK SHALL BE PERFORMED IN THE VICINITY OF SLOPES THAT ARE SATURATED FROM HEAVY RAINS, OR THROUGH WHICH GROUNDWATER IS ACTIVELY DRAINING.

4. THE CONTRACTOR SHALL BE RESPONSIBLE FOR THE DESIGN, INSTALLATION AND FINAL CLEARANCE OF ANY REQUIRED NEEDLING, UNDERPINNING, SHORING, FALSEWORK, FORMWORK, TEMPORARY SUPPORT, AND TEMPORARY BRACING OF EXISTING STRUCTURES.

5. SPUDDING, PRE-AUGERING, AND/OR JETTING OF PILES IS NOT PERMITTED, U.N.O.

6. TIMBER PILES SHALL CONFORM TO ASTM D 25. TIMBER PILES SHALL BE UNTREATED SOUTHERN YELLOW PINE, U.N.O.

7. DO NOT DRIVE, VIBRATE, OR EXTRACT PILES WITHIN 50 FT. OF RECENTLY POURED CONCRETE UNTIL THE CONCRETE HAS BEEN PROPERLY CURED FOR A MINIMUM OF 7 DAYS.

8. EXISTING AND NEW STRUCTURES SHALL NOT BE USED AS FALSEWORK FOR PILE DRIVING, U.N.O.

9. STEEL PIPE PILES SHALL BE WELDABLE IN ACCORDANCE WITH AWS D1.1. SPIRAL WELD PIPE PILES SHALL ONLY BE USED WITH THE WRITTEN APPROVAL OF THE ENGINEER.

10. PILES SHALL NOT BE PULLED, JACKED, OR OTHERWISE MANIPULATED INTO POSITION. THE CONTRACTOR SHALL ENSURE THAT ALL PILES ARE INSTALLED IN THE LOCATIONS INDICATED ON THE DRAWINGS. THE CONTRACTOR MUST COORDINATE WITH THE ENGINEER AND ALLOW THE ENGINEER TO MEASURE THE PILE POSITION BEFORE WELDING OR CONNECTING DRIVEN PILES, AT THE ENGINEER'S DISCRETION. THE FINAL HORIZONTAL TOLERANCE ALLOWED AT THE TOPS OF THE PILE IS 1" MAXIMUM. IF A PILE IS OUTSIDE OF THIS TOLERANCE AFTER DRIVING AND FALSEWORK REMOVAL, THE CONTRACTOR SHALL IMMEDIATELY NOTIFY THE ENGINEER AND SUBMIT A MODIFIED CONNECTION DETAIL TO THE ENGINEER FOR APPROVAL.

REBAR TABLE

BAR SIZE	MIN. LAP SPLICE		MIN. DEVELOPMENT LENGTH	
	TOP BAR (INCHES)	OTHER BAR (INCHES)	TOP BAR (INCHES)	OTHER BAR (INCHES)
#4	19	16	15	12
#5	24	19	19	14
#6	29	22	22	17
#7	42	32	32	25
#8	48	37	37	28
#9	60	46	46	35
#10	74	57	57	44
#11	88	68	68	52

LEGEND:

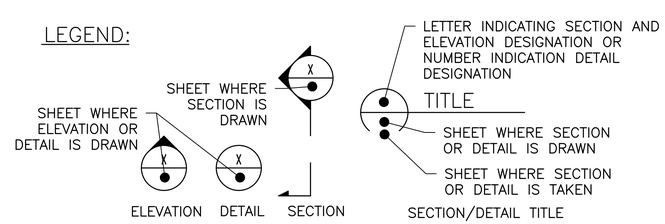

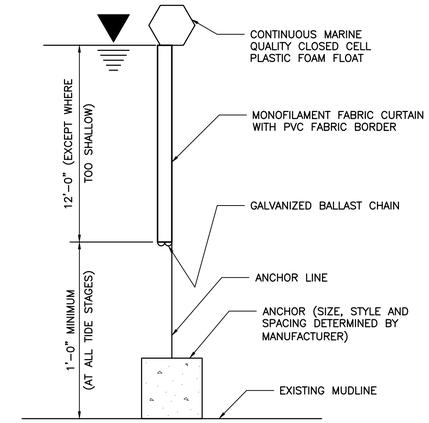

TURBIDITY CURTAIN DETAIL
N.T.S.

EROSION & SEDIMENT CONTROL NOTES:

1. A FLOATING TURBIDITY CURTAIN SHALL BE PLACED TO ENCOMPASS AREAS WHERE SEDIMENT MAY BE GENERATED AS A RESULT OF PROJECT WORK. A TURBIDITY CURTAIN MUST BE IN PLACE FOR ACTIVITIES THAT MAY GENERATE TURBIDITY, INCLUDING: PILE INSTALLATION OR EXTRACTION, PLACING CONCRETE UNDERWATER, DREDGING OR UNDERWATER DEBRIS REMOVAL, AND DEMOLITION.

2. THE CURTAIN HEIGHT SHALL NOT EXCEED 12 FT, AND SHALL BE SHORT ENOUGH TO MAINTAIN A 1 FT GAP BETWEEN ITS BOTTOM AND THE MUDLINE AT MEAN LOW WATER.

3. UNLESS NOTED OTHERWISE, THE TURBIDITY CURTAIN SHALL BE A TRITON TYPE III PERMABLE SILT AND TURBIDITY BARRIER, OR APPROVED EQUIVALENT. WHERE NO TIDAL FLUCTUATION OR CURRENT EXISTS, A TYPE II BARRIER MAY BE USED. SUBMIT PROPOSED BARRIER SPECIFICATIONS, ALONG WITH THE MANUFACTURER'S RECOMMENDED CONDITIONS FOR USE.

4. 8"ø EROSION CONTROL SEDIMENT LOGS SHALL BE PLACED ALONG THE WATER'S EDGE IN ALL AREAS WHERE SEDIMENT OR RUNOFF MAY ENTER THE WATER, THROUGHOUT THE DURATION OF THE PROJECT, TO PREVENT THE DISCHARGE OF SEDIMENTS INTO THE WATER.

5. ATTACH BUOYS WITH NAVIGATION LIGHTS WHERE REQUIRED BY THE COAST GUARD.

NAB-2021-61797
Revised 2/2/22
Sheet 3 of 15

ELEVATIONS:

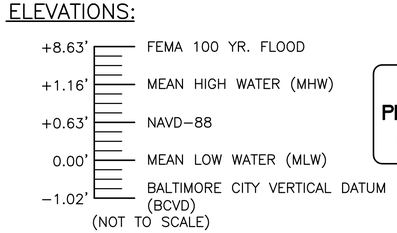

ISSUED FOR PERMIT REVISIION
DATE: 02/02/22

URBAN ENGINEERS
Urban Engineers, INC.
3200 Penn Street
Philadelphia, PA 19136
o. 215.922.8080

SEAL

BY:
DATE:

REV	DATE	DESCRIPTION	BY	CK'D	APV'D
1	02/02/22	ISSUED FOR PERMIT REVISIION	MKP	PB	MGW
0	06/16/21	ISSUED FOR PERMIT	MKP	PB	MGW

GOLD BOND BUILDING PRODUCTS, LLC
BALTIMORE, MD
GBBP BALTIMORE NEW DOLPHIN
GENERAL NOTES 2

SCALE: AS NOTED
DESIGN BY: MKP
APPROVED BY: MGW
DATE: 02/02/22
DRAWN BY: PYC
CHECKED BY: SMM
PROJECT NO.: 2020610213.000
SHEET NUMBER: GN-2
SHT. NO.: SHT 1 OF TOT SH
DRAWING FILE NO.: GN-1 GEN... .DWG
REV. NO.: 1

ISSUED FOR PERMIT
DATE PRINTED: 2/3/2022 10:59:05 AM
T:\PROJECTS\ON-GOING\2020 PROJECTS\2020610213.000 - NGC BALTIMORE NEW DOLPHIN\WORK\DRAWINGS\WORKING DRAWINGS\CURRENT\GN-1 GENERAL NOTES.DWG

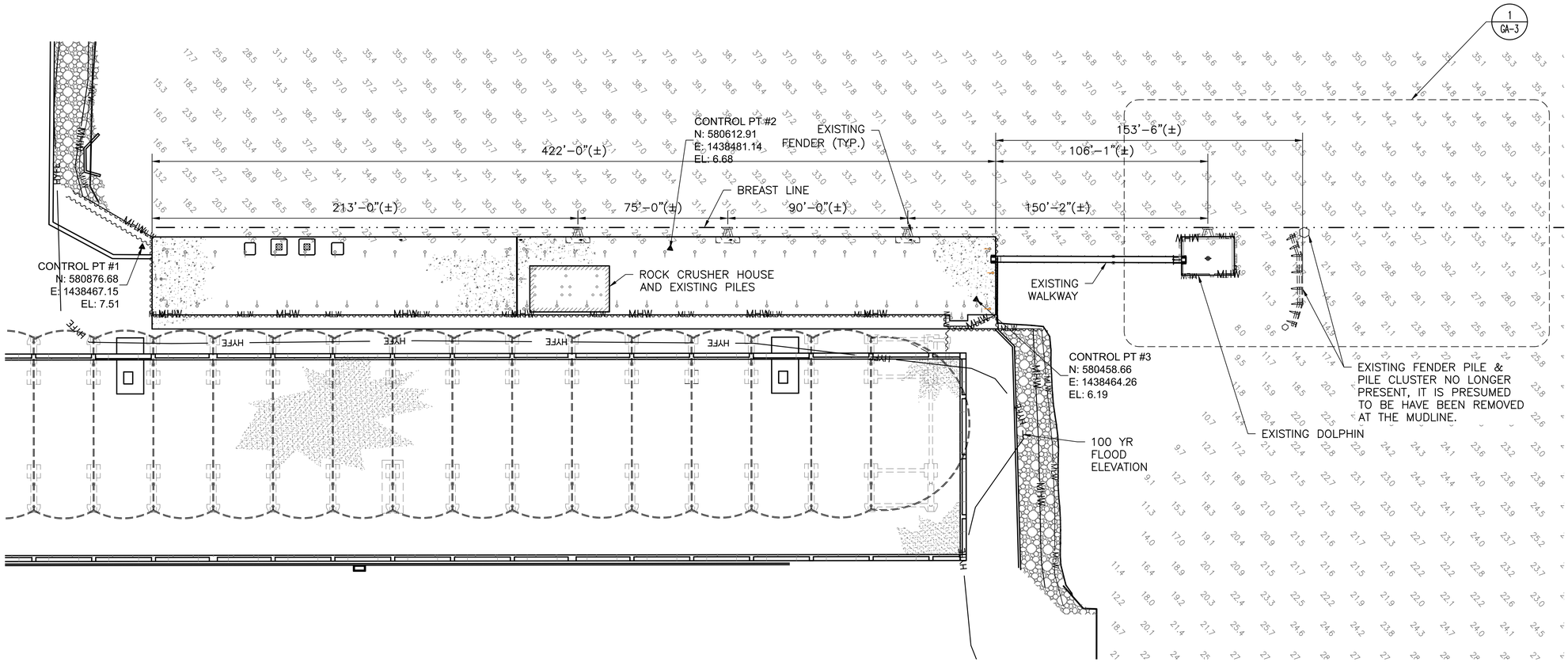

EXISTING SITE PLAN

0 30' 60'

NAB-2021-61797
Revised 2/2/22
Sheet 4 of 15

ISSUED FOR
PERMIT REVISION
DATE: 02/02/22

LEGEND:

- HYFE — 100 YEAR FLOOD ELEVATION
- MHW — MEAN HIGH WATER LINE
- MLW — MEAN LOW WATER LINE

NOTES:

1. FOR GENERAL NOTES, SEE GN-1 & GN-2.
2. SOME OF THE CONVEYOR STRUCTURES ON THE MAIN PIER ARE NOT SHOWN FOR CLARITY.

URBAN ENGINEERS
Urban Engineers, INC.
530 Walnut Street
Philadelphia, PA 19106
o. 215.922.8080

SEAL

BY:

DATE:

REV	DATE	DESCRIPTION	BY	CKD	APP'D
1	02/02/22	ISSUED FOR PERMIT REVISION	MKP	PB	MGW
0	06/16/21	ISSUED FOR PERMIT	MKP	PB	MGW

GOLD BOND BUILDING PRODUCTS, LLC
BALTIMORE, MD

GBBP BALTIMORE NEW DOLPHIN

EXISTING SITE PLAN

SCALE: AS NOTED
DATE: 02/02/22
DESIGN BY: MKP
APPROVED BY: MGW
DRAWN BY: FYC
CHECKED BY: SMM
PROJECT NO: 2020610213.000
SHEET NUMBER: GA-1
SHT. NO.: SHT 1 OF TOT SH
DRAWING FILE NO.: GA-1 EXI... .DWG
REV. NO.: 1

T:\PROJECTS\ON-GOING\2020 PROJECTS\2020610213.000 - NGC BALTIMORE NEW DOLPHIN\WORK\DRAWINGS\WORKING DRAWINGS\CURRENT\GA-1 EXISTING SITE PLAN.DWG

DATE PRINTED: 2/3/2022 11:00:33 AM

ISSUED FOR PERMIT

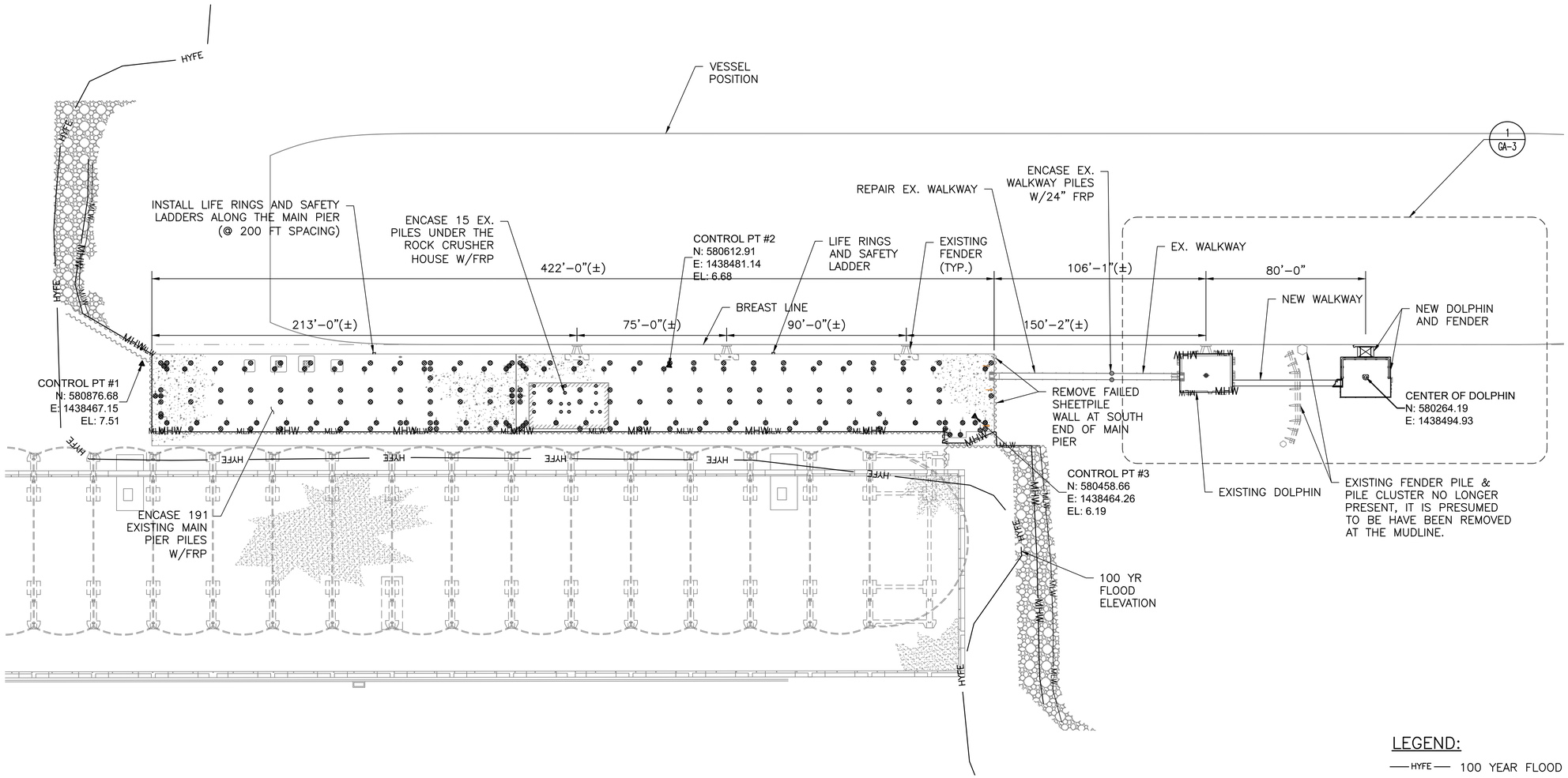

PROPOSED SITE PLAN

0 30' 60'

	IMPACT TABLE					
LEGEND	DESCRIPTIONS	OVERALL SIZE/MAX. LxW	CROSS SECTION AREA, SF	OVERALL QUANTITIES	PERMANENT IMPACT WATERCOURSE (MAX. SIZE, AREA (SF))	TEMPORARY IMPACT WATERCOURSE (SIZE, AREA (SF))
	PIPE PILE W/ENCASEMENT	24" DIA.	3.14	10	31.4	
	BATTER PILE W/ENCASEMENT	24" DIA.	3.14	8	25.1	
	GANGWAY	54.5'x3.75'	204.37	1	204.4	
	TURBIDITY CURTAIN					196'x141', 24024
	BREASTING DOLPHIN	20'x25'	500	1	500	
	REPAIR JACKETED PILE	30"ø	4.90	191	936	
	REPAIR JACKETED PILE	18"ø	1.77	15	16.8	
	REPAIR JACKETED FOR HP PILE	24"ø	3.14	2	6.3	
	TOTAL (SF)				1720	24024

NAB-2021-61797
Revised 2/2/22
Sheet 5 of 15

ISSUED FOR PERMIT REVISIION
DATE: 02/02/22

LEGEND:

- HYFE — 100 YEAR FLOOD ELEVATION
- MHW — MEAN HIGH WATER LINE
- MLW — MEAN LOW WATER LINE

NOTES:

1. FOR GENERAL NOTES, SEE GN-1 & GN-2.
2. NOTE THAT SOME CONVEYOR STRUCTURES ON THE MAIN PIER ARE NOT SHOWN FOR CLARITY.
3. THE CONTRACTOR SHALL SURVEY EXISTING AND PROPOSED STRUCTURES TO ESTABLISH THE NEW FENDER LINE, AND SUBMIT THE RESULTS TO THE ENGINEER. THE NEW FENDER LINE MAYBE ADJUSTED SLIGHTLY, BASED ON THE EXACT ENDER AND PANEL DIMENSIONS, AND FIELD OBSTRUCTIONS, BUT MUST BOTH MAINTAIN ADEQUATE CLEARANCE FROM THE EXISTING FENDER LINE, AND KEEP HARD POINTS OF THE NEW DOLPHINS FROM CAUSING UNSAFE CONDITIONS DURING CONSTRUCTION.
4. THE CONTRACTOR'S FALSEWORK SHALL BE FLEXIBLE ENOUGH TO ACCOMMODATE SHIFTS OF UP TO 5 FT IN ORDER TO ADDRESS OBSTRUCTIONS OR FENDER DIMENSION, AS DISCUSSED ABOVE.

URBAN ENGINEERS
Urban Engineers, INC.
530 Walnut Street
Philadelphia, PA 19106
o. 215.922.8080

SEAL

BY:
DATE:

REV	DATE	DESCRIPTION	BY	CKD	APP'D
1	02/02/22	ISSUED FOR PERMIT REVISION	MKP	PB	MGW
0	06/16/21	ISSUED FOR PERMIT	MKP	PB	MGW

GOLD BOND BUILDING PRODUCTS, LLC
BALTIMORE, MD

GBBP BALTIMORE NEW DOLPHIN

PROPOSED SITE PLAN

SCALE: AS NOTED
DATE: 02/02/22
DESIGN BY: MKP
APPROVED BY: MGW
DRAWN BY: FYC
CHECKED BY: SMM
PROJECT NO.: 2020610213.000
SHEET NUMBER: GA-2
SHT. NO.: SHT 1 OF TOT SH
DRAWING FILE NO.: GA-2 PRO... .DWG
REV. NO.: 1

ISSUED FOR PERMIT

T:\PROJECTS\ON-GOING\2020 PROJECTS\2020610213.000 - NGC BALTIMORE NEW DOLPHIN\WORK\DRAWINGS\WORKING DRAWINGS\CURRENT\GA-2 PROPOSED SITE PLAN.DWG

DATE PRINTED: 2/3/2022 11:01:43 AM

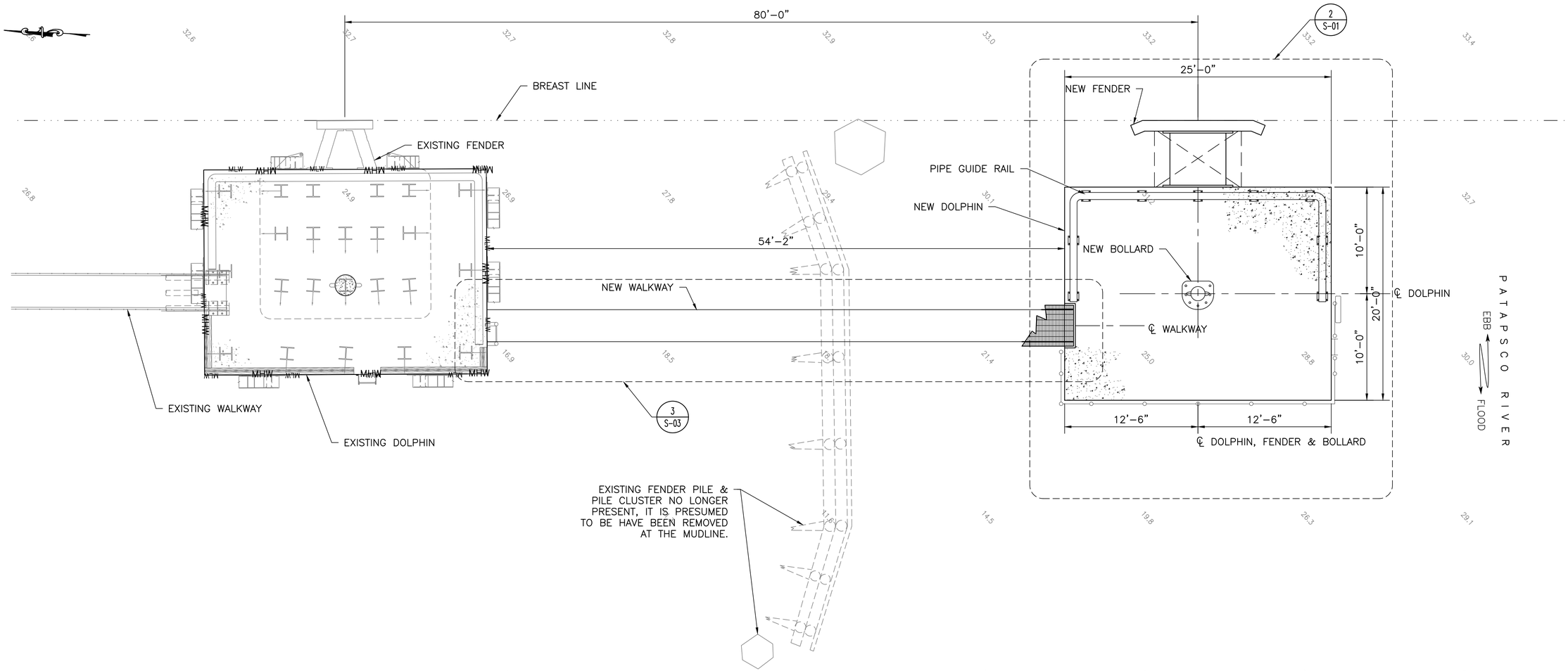

1 GA-3 / GA-1 PROPOSED DOLPHIN AND WALKWAY

0 5' 10'

NAB-2021-61797
Revised 2/2/22
Sheet 6 of 15

ISSUED FOR PERMIT REVISIION
DATE: 02/02/22

LEGEND:

100 YEAR FLOOD ELEVATION

— MHW — MEAN HIGH WATER LINE

— MLW — MEAN LOW WATER LINE

NOTES:

1. FOR GENERAL NOTES, SEE GN–1 & GN–2.

URBAN ENGINEERS
Urban Engineers, INC.
530 Walnut Street
Philadelphia, PA 19106
o. 215.922.8880

SEAL

BY:

DATE:

REV	DATE	DESCRIPTION	BY	CKD	APP'D
1	02/02/22	ISSUED FOR PERMIT REVISION	MKP	PB	MGW
0	06/16/21	ISSUED FOR PERMIT	MKP	PB	MGW

GOLD BOND BUILDING PRODUCTS, LLC — BALTIMORE, MD

GBBP BALTIMORE NEW DOLPHIN

PROPOSED DOLPHIN AND WALKWAY

SCALE: AS NOTED
DATE: 02/02/22
DESIGN BY: MKP
APPROVED BY: MGW
DRAWN BY: FYC
CHECKED BY: SMM
PROJECT NO.: 2020610213.000
SHEET NUMBER: GA-3
SHT. NO.: SHT 1 OF TOT SH
DRAWING FILE NO.: GA-3 PRO... .DWG
REV. NO.: 1

ISSUED FOR PERMIT

DATE PRINTED: 2/3/2022 11:03:19 AM

T:\PROJECTS\ON-GOING\2020 PROJECTS\2020610213.000- NGC BALTIMORE NEW DOLPHIN\WORK\DRAWINGS\WORKING DRAWINGS\CURRENT\GA-3 PROPOSED DOLPHIN AND WALKWAY.DWG

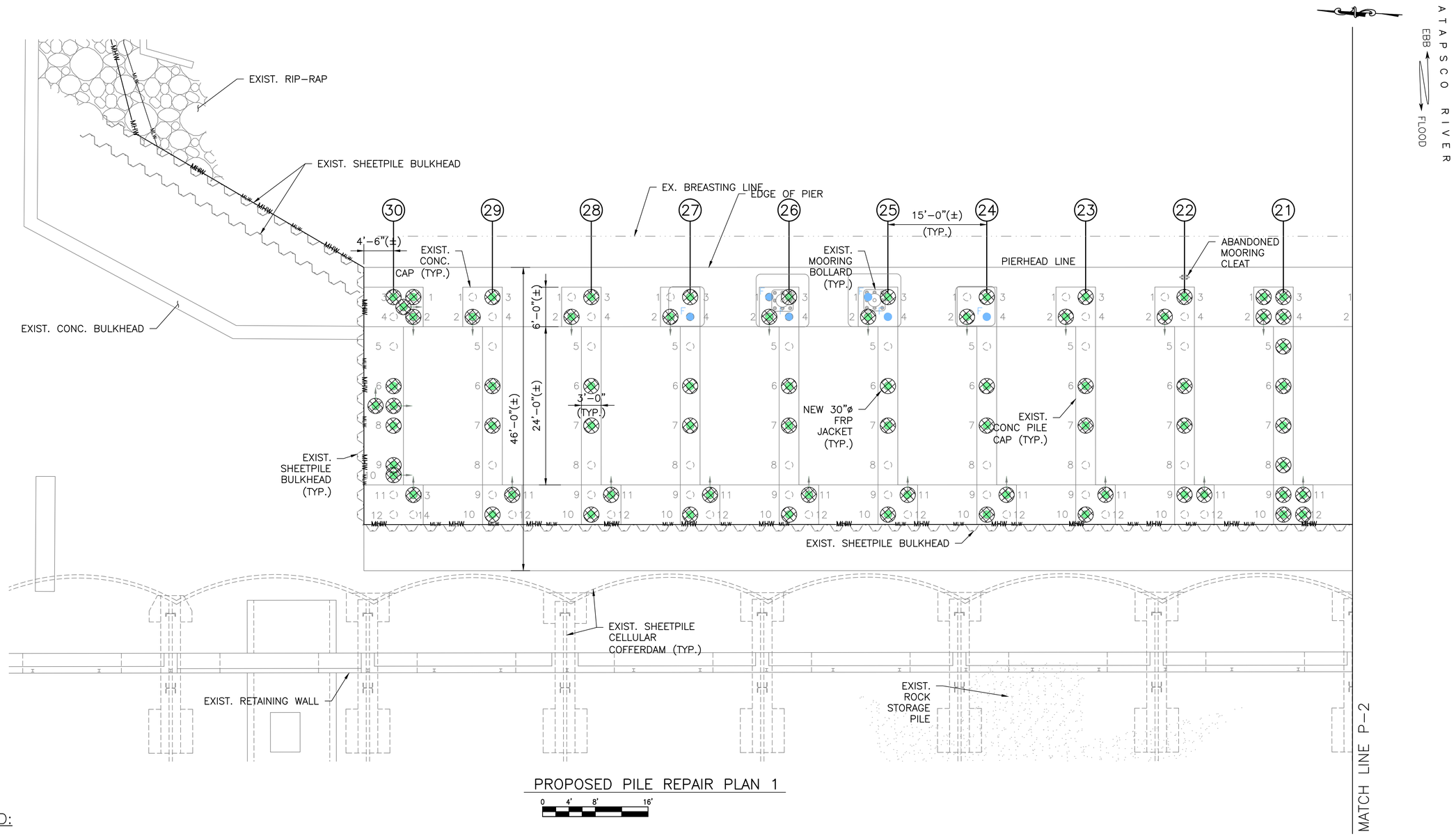

PROPOSED PILE REPAIR PLAN 1

0 4' 8' 16'

LEGEND:

- (X) BENT NUMBER
- ABANDONED PLUMB PILE
- ABANDONED BATTER PILE
- JACKETED PILE
- FIBERGLASS JACKETED PILE
- SEVERED PILE
- 36"ø CONC. FENDER PILE
- NEW 30"ø FIBERGLASS REINFORCED PLASTIC PIPE (FRP.) JACKET

ISSUED FOR PERMIT REVISIION
DATE: 02/02/22

NAB-2021-61797
Revised 2/2/22
Sheet 7 of 15

Urban Engineers, INC.
530 Walnut Street
Philadelphia, PA 19106
o. 215.922.8080

SEAL

BY:

DATE:

REV	DATE	DESCRIPTION	BY	CKD	APD
1	02/02/22	ISSUED FOR PERMIT REVISION	MKP	PB	MGW
0	06/16/21	ISSUED FOR PERMIT	MKP	PB	MGW

GOLD BOND BUILDING PRODUCTS, LLC
BALTIMORE, MD

GBBP BALTIMORE NEW DOLPHIN

PROPOSED PILE REPAIR PLAN 1

SCALE: AS NOTED
DATE: 02/02/22
DESIGN BY: MKP
APPROVED BY: MGW
DRAWN BY: FYC
CHECKED BY: SMM
PROJECT NO.: 2020610213.000
SHEET NUMBER: P-1
SHT. NO.: SHT 1 OF TOT SH
DRAWING FILE NO.: P-1 EXIS... .DWG
REV. NO.: 1

T:\PROJECTS\ON-GOING\2020 PROJECTS\2020610213.000 - NGC BALTIMORE NEW DOLPHIN\WORK\DRAWINGS\WORKING DRAWINGS\CURRENT\P-1 EXISING MAIN PIER PILE PLAN 1.DWG

DATE PRINTED: 2/3/2022 11:04:00 AM

ISSUED FOR PERMIT

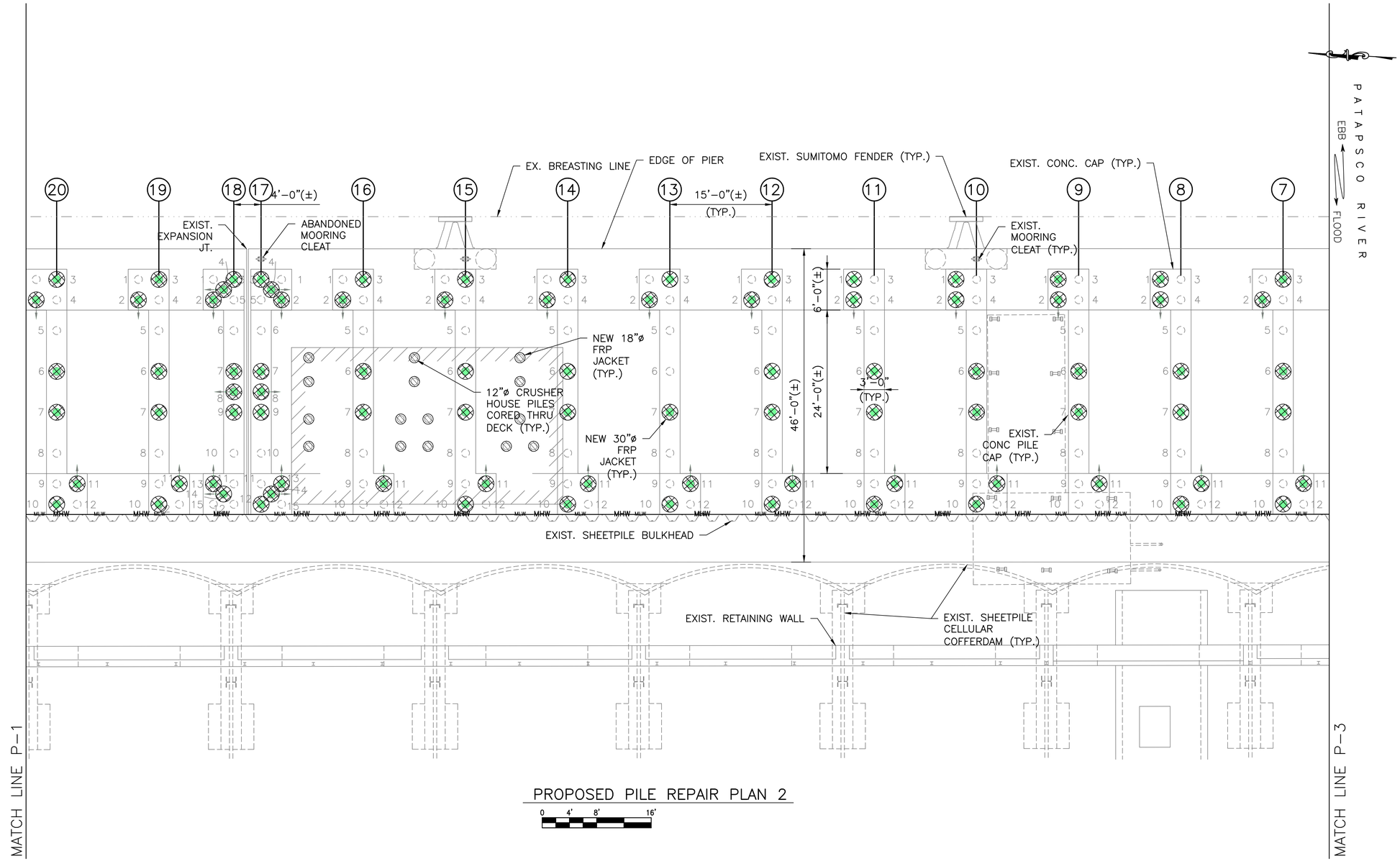

PROPOSED PILE REPAIR PLAN 2

LEGEND:

- BENT NUMBER
- ABANDONED PLUMB PILE
- ABANDONED BATTER PILE
- JACKETED PILE
- FIBERGLASS JACKETED PILE
- SEVERED PILE
- 36"ø CONC. FENDER PILE
- NEW 30"ø FIBERGLASS REINFORCED PLASTIC PIPE (FRP.) JACKET
- NEW 18"ø FIBERGLASS REINFORCED PLASTIC PIPE (FRP.) JACKET

ISSUED FOR PERMIT REVISIION
DATE: 02/02/22

NAB-2021-61797
Revised 2/2/22
Sheet 8 of 15

Urban Engineers, INC.
530 Walnut Street
Philadelphia, PA 19106
o. 215.922.8080

SEAL

BY:

DATE:

REV	DATE	DESCRIPTION	BY	CKD	APP'D
1	02/02/22	ISSUED FOR PERMIT REVISION	MKP	PB	MGW
0	06/16/21	ISSUED FOR PERMIT	MKP	PB	MGW

GOLD BOND BUILDING PRODUCTS, LLC
BALTIMORE, MD

GBBP BALTIMORE NEW DOLPHIN

PROPOSED PILE REPAIR PLAN 2

SCALE: AS NOTED
DATE: 02/02/22
DESIGN BY: MKP
APPROVED BY: MGW
DRAWN BY: FYC
CHECKED BY: SMM
PROJECT NO.: 2020610213.000
SHEET NUMBER: P-2
SHT. NO.: SHT 1 OF TOT SH
DRAWING FILE NO.: P-1 EXIS... .DWG
REV. NO.: 1

ISSUED FOR PERMIT

DATE PRINTED: 2/3/2022 11:04:12 AM

T:\PROJECTS\ON-GOING\2020 PROJECTS\2020610213.000 - NGC BALTIMORE NEW DOLPHIN\WORK\DRAWINGS\WORKING DRAWINGS\CURRENT\P-1 EXISING MAIN PIER PILE PLAN 1.DWG

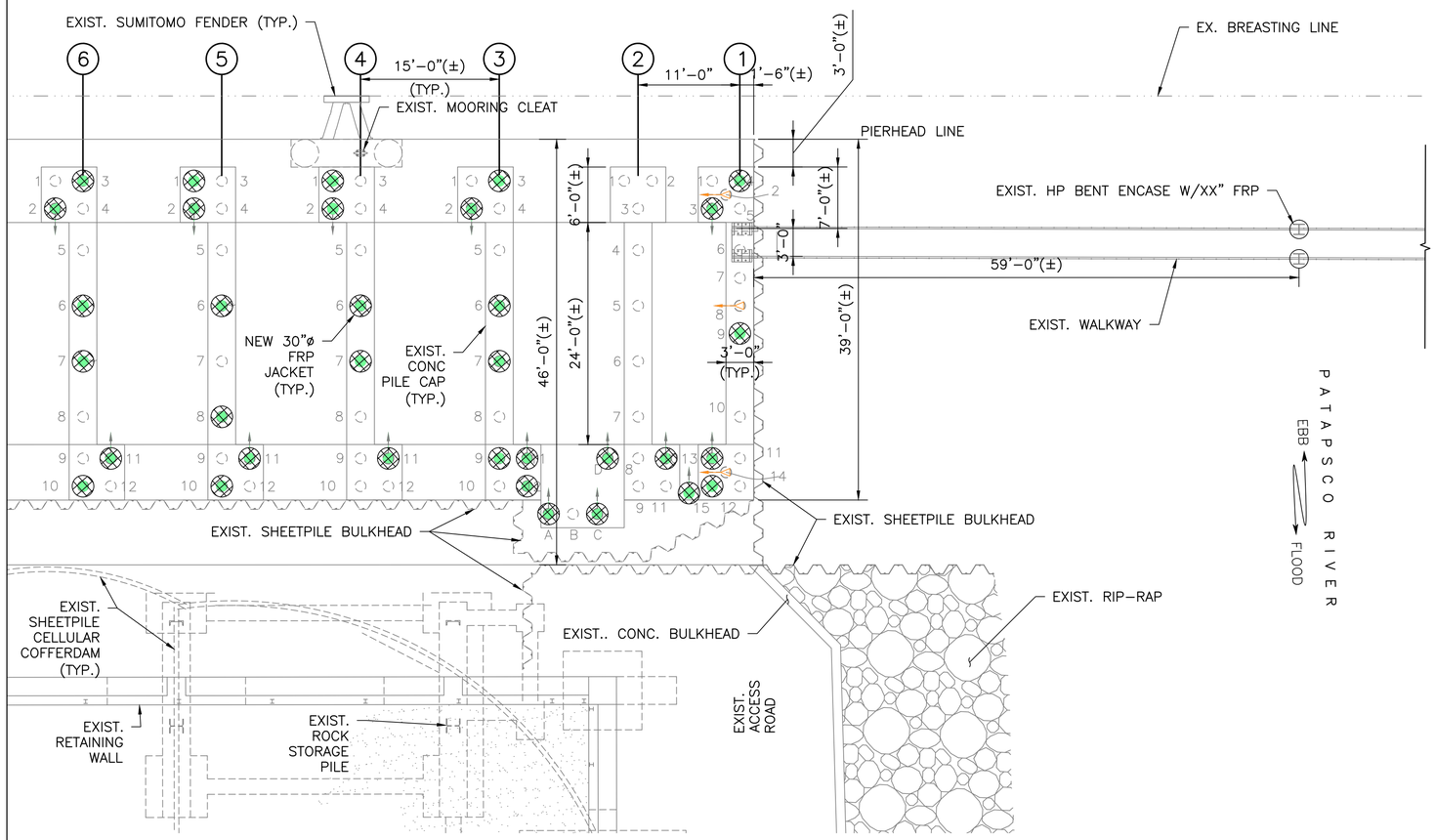

PROPOSED PILE REPAIR PLAN 3

0 4' 8' 16'

LEGEND:

- (X) BENT NUMBER
- ABANDONED PLUMB PILE
- ABANDONED BATTER PILE
- JACKETED PILE
- FIBERGLASS JACKETED PILE
- SEVERED PILE
- 36"ø CONC. FENDER PILE
- NEW 30"ø FIBERGLASS REINFORCED PLASTIC PIPE (FRP.) JACKET
- ABANDONED/BROKEN PILE

ISSUED FOR PERMIT REVISIION
DATE: 02/02/22

NAB-2021-61797
Revised 2/2/22
Sheet 9 of 15

Urban Engineers, INC.
530 Walnut Street
Philadelphia, PA 19106
o. 215.922.8080

SEAL

BY:
DATE:

REV	DATE	DESCRIPTION	BY	CKD	APD
1	02/02/22	ISSUED FOR PERMIT REVISION	MKP	PB	MGW
0	06/16/21	ISSUED FOR PERMIT	MKP	PB	MGW

GOLD BOND BUILDING PRODUCTS, LLC
BALTIMORE, MD

GBBP BALTIMORE NEW DOLPHIN

PROPOSED PILE REPAIR PLAN 3

SCALE: AS NOTED
DATE: 02/02/22
DESIGN BY: MKP
APPROVED BY: MGW
DRAWN BY: FYC
CHECKED BY: SMM
PROJECT NO.: 2020610213.000
SHEET NUMBER: P-3
SHT. NO.: SHT 1 OF TOT SH
DRAWING FILE NO.: P-1 EXIS... .DWG
REV. NO.: 1

ISSUED FOR PERMIT

DATE PRINTED: 2/3/2022 11:04:22 AM

T:\PROJECTS\ON-GOING\2020 PROJECTS\2020610213.000 - NGC BALTIMORE NEW DOLPHIN\WORK\DRAWINGS\WORKING DRAWINGS\CURRENT\P-1 EXISING MAIN PIER PILE PLAN 1.DWG

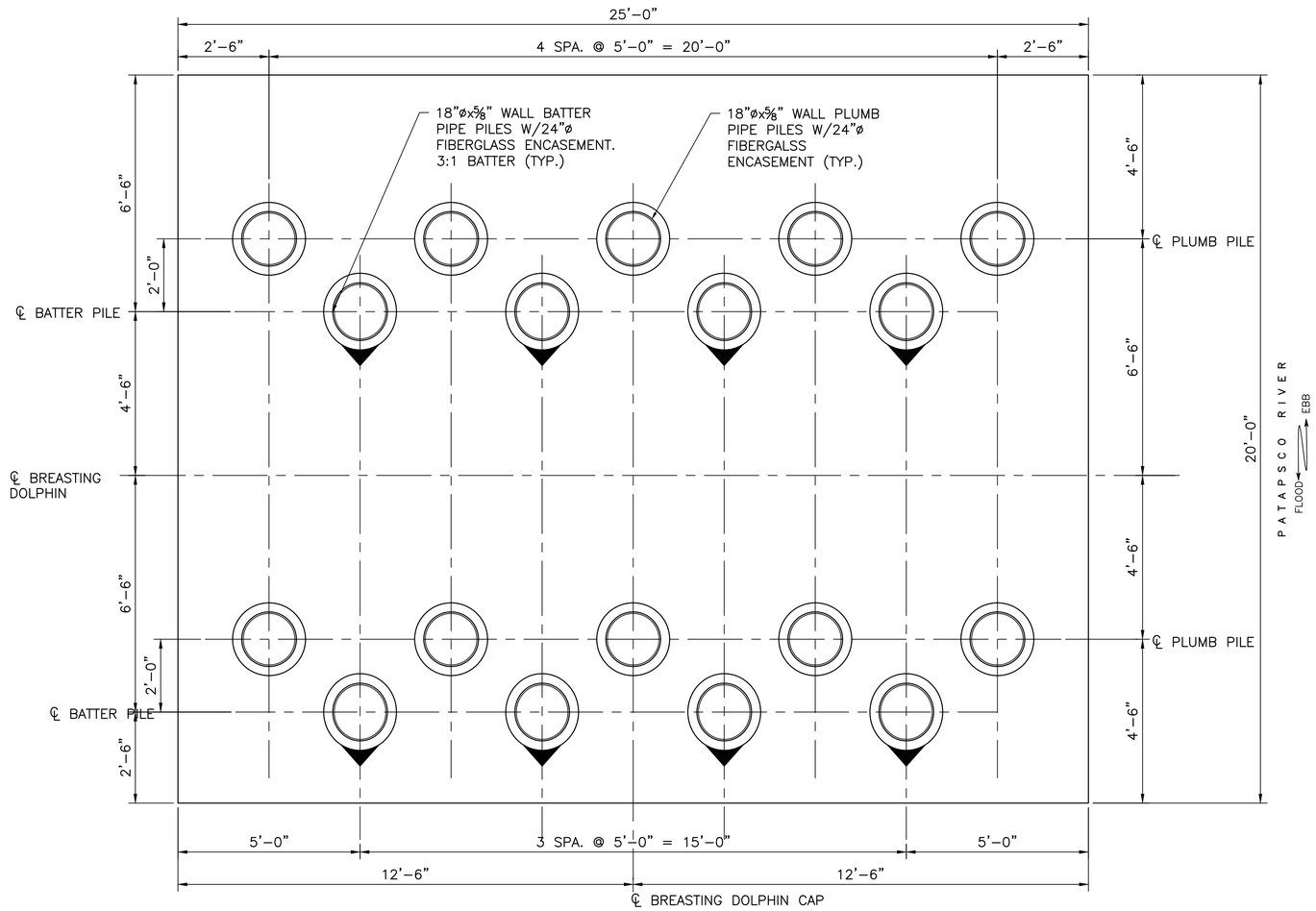

NOTE: PLAN SHOWN AT BOTTOM OF CAP (EL. +1'–8"(±))

NOTES:

1. FOR GENERAL NOTES, SEE DWGS. GN–1 & GN–2.
2. NOTE THAT PILE PLAN IS SHOWN AT THE BOTTOM OF THE CAP ELEVATION OF +1'–8".
3. THE NEW DOLPHIN HAS BEEN LOCATED TO MINIMIZE THE POTENTIAL FOR INTERFERENCE FROM ABANDONED TIMBER PILE FIELDS, HOWEVER, SOME ADJUSTMENT MAY BE NECESSARY. THE CONTRACTOR'S FRAMEWORK MUST BE FLEXIBLE ENOUGH TO ALLOW ADJUSTMENTS OF PILE LOCATIONS UP TO 5 FEET IN ANY DIRECTION.

DOLPHIN PILE PLAN

0 1' 2' 4'

NAB-2021-61797
Revised 2/2/22
Sheet 10 of 15

ISSUED FOR PERMIT REVISIION
DATE: 02/02/22

URBAN ENGINEERS
Urban Engineers, INC.
530 Walnut Street
Philadelphia, PA 19106
p. 215.922.8880

SEAL

BY:

DATE:

REV	DATE	DESCRIPTION	BY	CKD	APD
1	02/02/22	ISSUED FOR PERMIT REVISION	MKP	PB	MGW
0	06/16/21	ISSUED FOR PERMIT	MKP	PB	MGW

GOLD BOND BUILDING PRODUCTS, LLC
BALTIMORE, MD

GBBP BALTIMORE NEW DOLPHIN

PROPOSED PILE PLAN

SCALE: AS NOTED
DATE: 02/02/22
DESIGN BY: MKP
APPROVED BY: MGW
DRAWN BY: FYC
CHECKED BY: SMM
PROJECT NO: 2020610213.000
SHEET NUMBER: P-4
SHT. NO.: SHT 1 OF TOT SH
DRAWING FILE NO.: P-4 PROP... .DWG
REV. NO.: 1

T:\PROJECTS\ON-GOING\2020 PROJECTS\2020610213.000 - NGC BALTIMORE NEW DOLPHIN\WORK\DRAWINGS\WORKING DRAWINGS\CURRENT\P-4 PROPOSED PILE PLAN.DWG

DATE PRINTED: 2/3/2022 11:04:40 AM

ISSUED FOR PERMIT

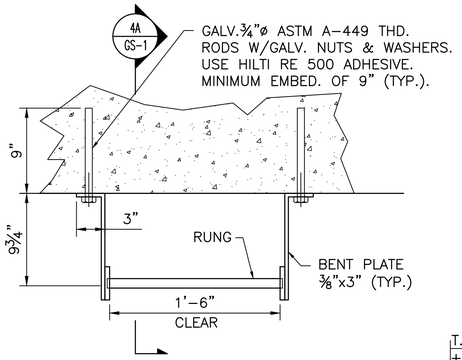

4 GS-1 GA-3 LADDER – PLAN VIEW

0 1/2' 1' 1 1/2'

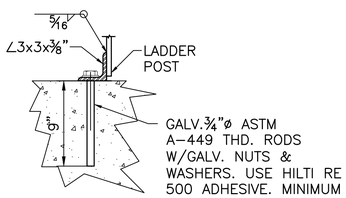

4C GS-1 GS-1 SECTION

0 1/2' 1' 1 1/2'

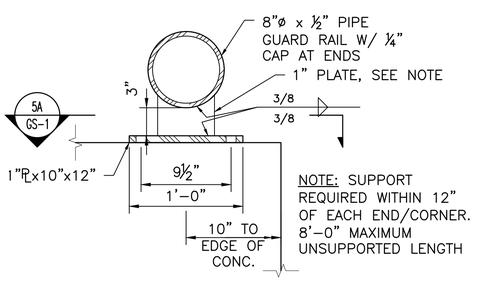

5 GS-1 S-01 GUARD RAIL SECTION

0 1/2' 1' 1 1/2'

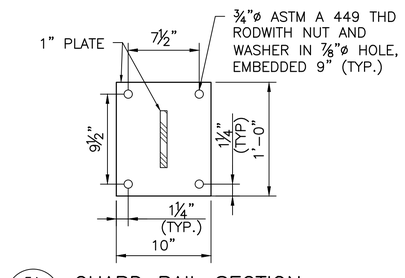

5A GS-1 GS-1 GUARD RAIL SECTION

0 1/2' 1' 1 1/2'

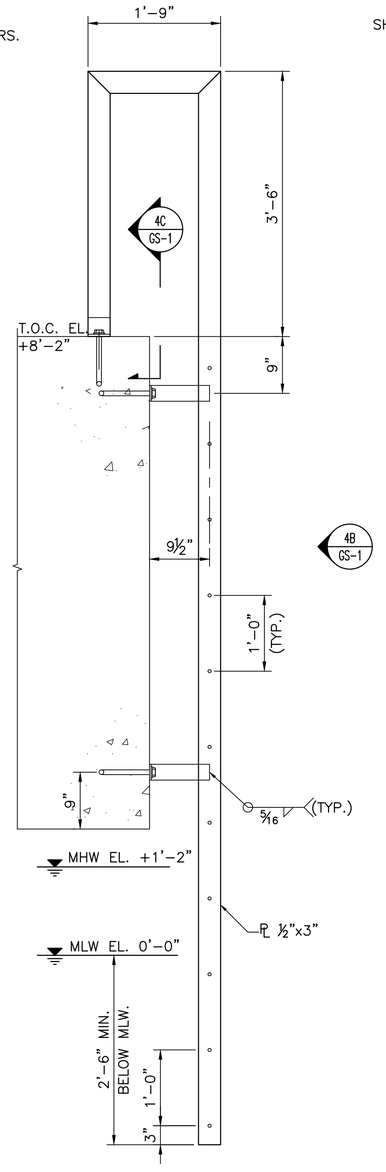

4A GS-1 GS-1 LADDER SECTION

0 1' 2'

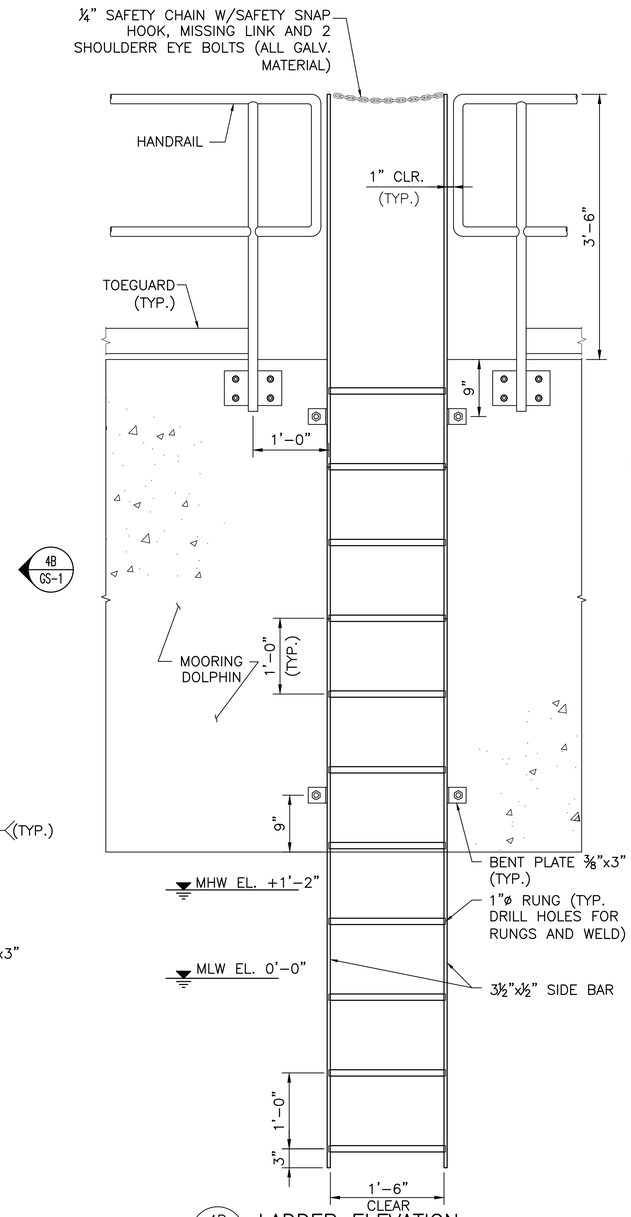

4B GS-1 GS-1 LADDER ELEVATION

0 1' 2'

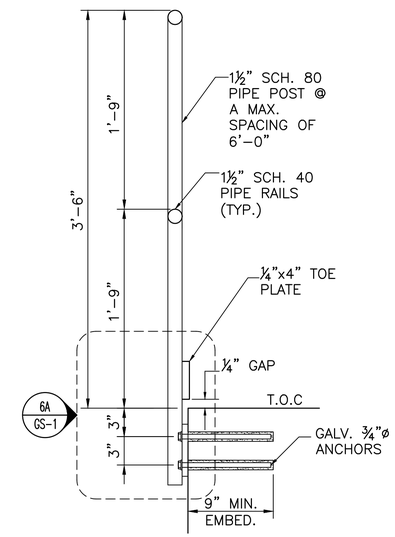

6 GS-1 S-01 HANDRAIL SECTION

0 1/2' 1' 1 1/2'

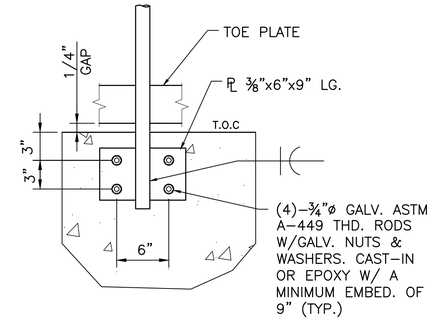

6A GS-1 GS-1 HANDRAIL SECTION

0 1/2' 1' 1 1/2'

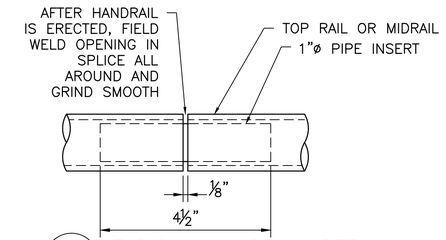

7 GS-1 TYPICAL HANDRAIL DETAIL

0 1/2' 1' 1 1/2'

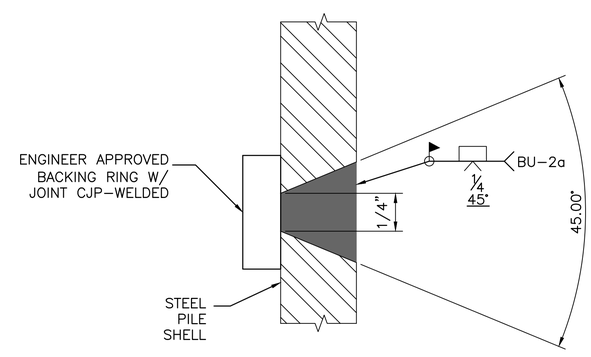

TYPICAL PIPE PILE SPLICE DETAIL

0 2" 4"

NOTES:

1. FOR GENERAL NOTES, SEE GN-1 & GN-2.

NAB-2021-61797
Revised 2/2/22
Sheet 11 of 15

ISSUED FOR PERMIT REVISIION
DATE: 02/02/22

Urban Engineers, INC.
530 Walnut Street
Philadelphia, PA 19106
o. 215.922.8080
URBAN ENGINEERS

SEAL

BY:

DATE:

REV	DATE	DESCRIPTION	BY	CKD	APD
0	06/16/21	ISSUED FOR PERMIT	MKP	PB	MGW
1	02/02/22	ISSUED FOR PERMIT REVISION	MKP	PB	MGW

GOLD BOND BUILDING PRODUCTS, LLC
BALTIMORE, MD

GBBP BALTIMORE NEW DOLPHIN

GENERAL STEEL DETAILS

SCALE: AS NOTED
DATE: 02/02/22
DESIGN BY: MKP
APPROVED BY: MGW
DRAWN BY: FYC
CHECKED BY: SMM
PROJECT NO.: 2020610213.000
SHEET NUMBER: GS-1
SHT. NO.: SHT 1 OF TOT SH
DRAWING FILE NO.: S-01.dwg... .DWG
REV. NO.: 1

T:\PROJECTS\ON-GOING\2020 PROJECTS\2020610213.000 - NGC BALTIMORE NEW DOLPHIN\WORK\DRAWINGS\WORKING DRAWINGS\CURRENTS-01.DWG

DATE PRINTED: 2/3/2022 11:05:51 AM

ISSUED FOR PERMIT

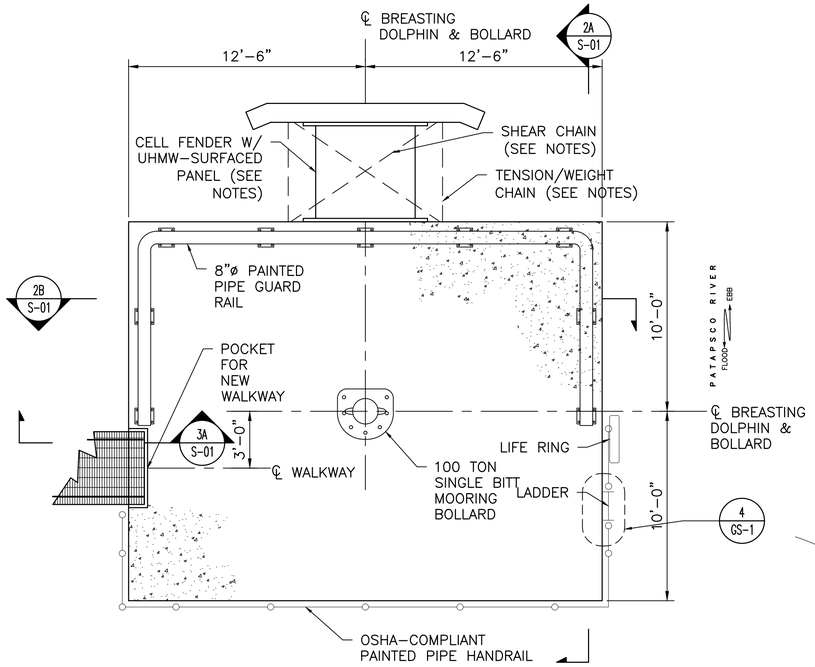

2 S-01 GA-3 PROPOSED DOLPHIN PLAN VIEW

0 2' 4' 8'

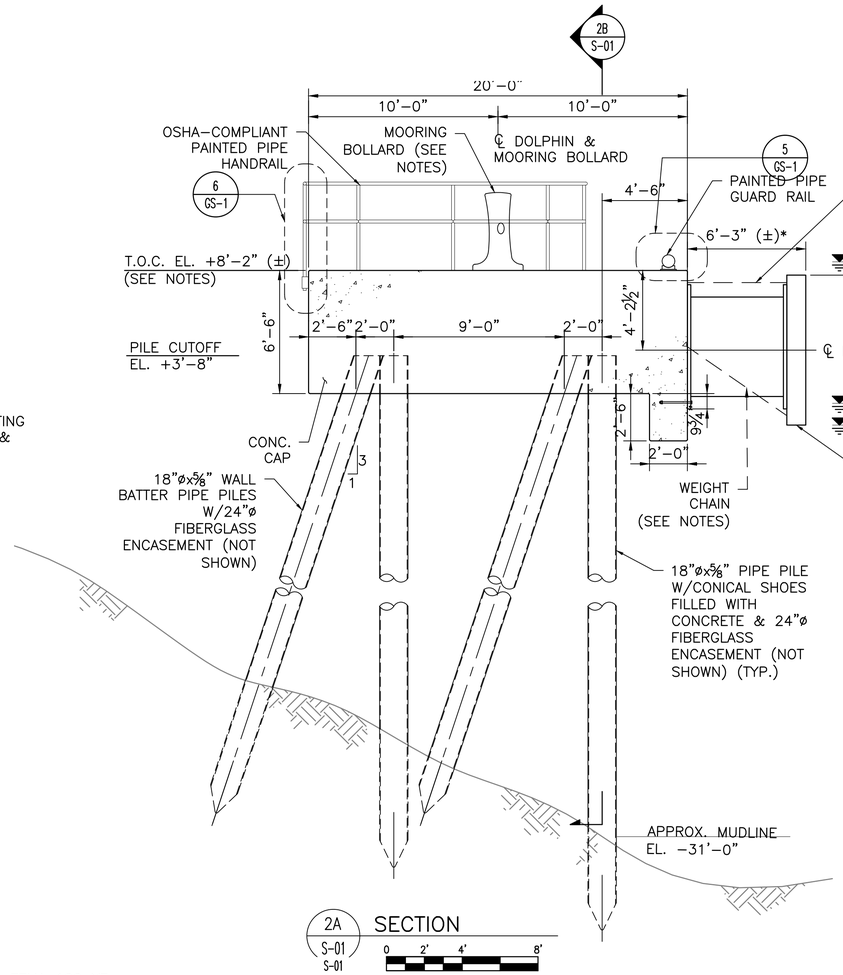

2A S-01 S-01 SECTION

0 2' 4' 8'

NOTES:

1. FOR GENERAL NOTES, SEE DWGS. GN-1 & GN-2.
2. FOR NOTES REGARDING NEW BOLLARDS, FENDERS, FENDER CHAINS AND FENDER PANELS, SEE DWG GN-2.
3. NOTE THAT DIMENSIONS LABELED "*" SHALL BE FIELD VERIFIED AND BASED ON THE NEWLY ESTABLISHED FENDER LINE. THE CONTRACTOR SHALL SUBMIT A SURVEY OF THE PROPOSED FENDER LINE TO VERIFY THESE DIMENSIONS AND LOCATE THE NEW BREASTING DOLPHINS. ALSO NOTE THAT THE DIMENSIONS OF THE FENDER AND PANEL OFFSET ARE APPROXIMATE, AND WILL DEPEND ON THE FENDER AND PANEL DETAILS. A STOOL SECTION MAY BE NECESSARY. SEE DWG GA-2 FOR FURTHER DETAILS.
4. PROCURE AND INSTALL A SAFETY LADDER WITH WALK-THROUGH HANDRAIL AND SAFETY CHAINS. THE LADDER SHALL CONFORM TO THE REQUIREMENTS OF OSHA 29 CFR 1926.1053 & NAVFAC C201090.1.2, EXTEND A MINIMUM OF 2.5 FEET BELOW MLW, AND BE PAINTED SAFETY YELLOW. INSTALL THE LADDER USING THE MANUFACTURER'S RECOMMENDATIONS.
5. MOUNT A U.S. COAST GUARD APPROVED 30"ø LIFE RING, WITH 100 FT OF ATTACHED LINE, IN A SUITABLE ENCLOSURE ON THE HANDRAIL ADJACENT TO THE LADDER.
6. INSTALL BOLLARDS USING MANUFACTURER'S RECOMMENDED PROCEDURE(S), METHODS, AND MATERIALS.
7. INSTALL TENSION, WEIGHT AND SHEAR CHAINS, AS REQUIRED BY THE FENDER MANUFACTURER.
8. T.O.G OF NEW WALKWAY TO MATCH T.O.C. ELEVATION AT THE NEW DOLPHIN ELSEWHERE, SLOPE DOLPHIN SURFACE TO DRAIN AWAY FROM THE CENTER, WITH A MINIMUM 1% SLOPE.
9. TYPICAL PILE ARRANGEMENTS ARE SHOWN, FOR CLARITY. SOME PILES MAY REQUIRE ADJUSTMENTS IN PLAN LOCATION AND BATTER ANGLE TO AVOID OBSTRUCTION.

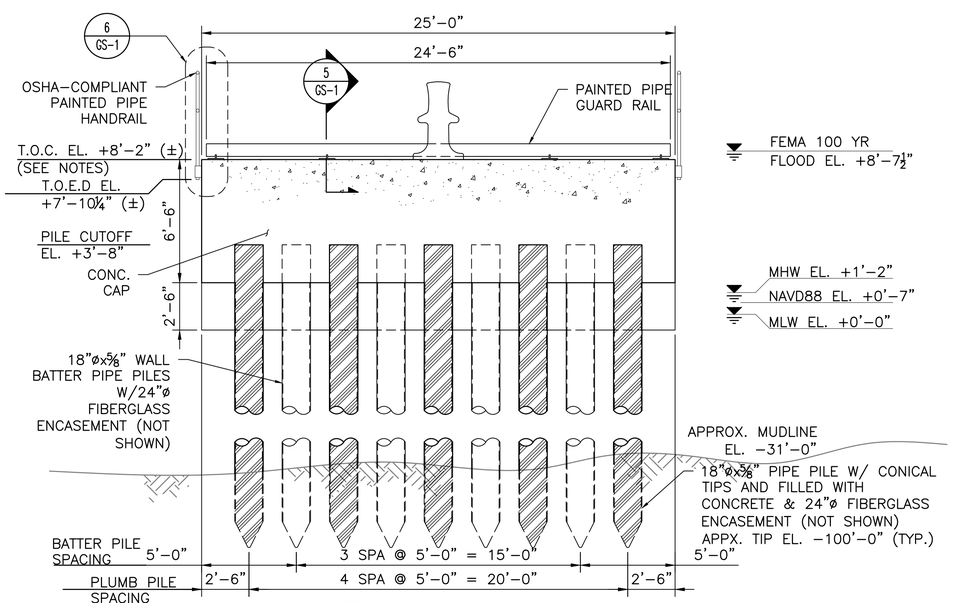

2B S-01 S-01 SECTION

0 2' 4' 8'

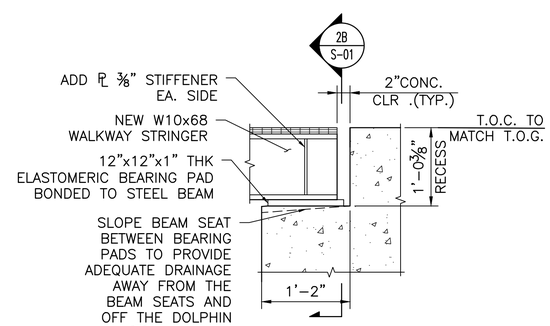

3A S-01 S-01 WALKWAY POCKET SECTION

0 1' 2'

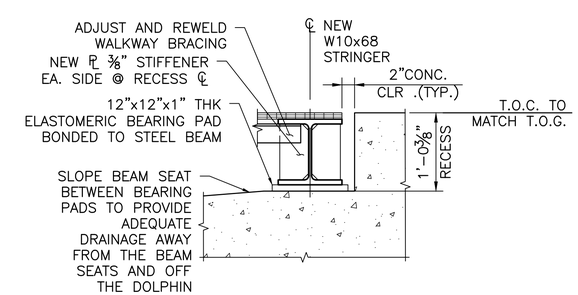

3B S-01 S-01 WALKWAY POCKET SECTION

0 1' 2'

ISSUED FOR PERMIT REVISIION
DATE: 02/02/22

NAB-2021-61797
Revised 2/2/22
Sheet 12 of 15

Urban Engineers, INC.
530 Walnut Street
Philadelphia, PA 19106
o. 215.922.8080
URBAN ENGINEERS

SEAL

BY:

DATE:

REV	DATE	DESCRIPTION	CK'D	APP'D
1	02/02/22	ISSUED FOR PERMIT REVISION	MKP	MGW
0	06/16/21	ISSUED FOR PERMIT	PB	MGW

GOLD BOND BUILDING PRODUCTS, LLC — BALTIMORE, MD

GBBP BALTIMORE NEW DOLPHIN

PROPOSED DOLPHIN PLAN, SECTIONS AND DETAILS

SCALE: AS NOTED
DATE: 02/02/22
DESIGN BY: MKP
APPROVED BY: MGW
DRAWN BY: FYC
CHECKED BY: SMM
PROJECT NO.: 2020610213.000
SHEET NUMBER: S-01
SHT. NO.: SHT 1 OF TOT SH
DRAWING FILE NO.: S-01.dwg... .DWG
REV. NO.: 1

ISSUED FOR PERMIT

DATE PRINTED: 2/3/2022 11:06:25 AM

T:\PROJECTS\ON-GOING\2020 PROJECTS\2020610213.000 - NGC BALTIMORE NEW DOLPHIN\WORK\DRAWINGS\WORKING DRAWINGS\CURRENTS-01.DWG

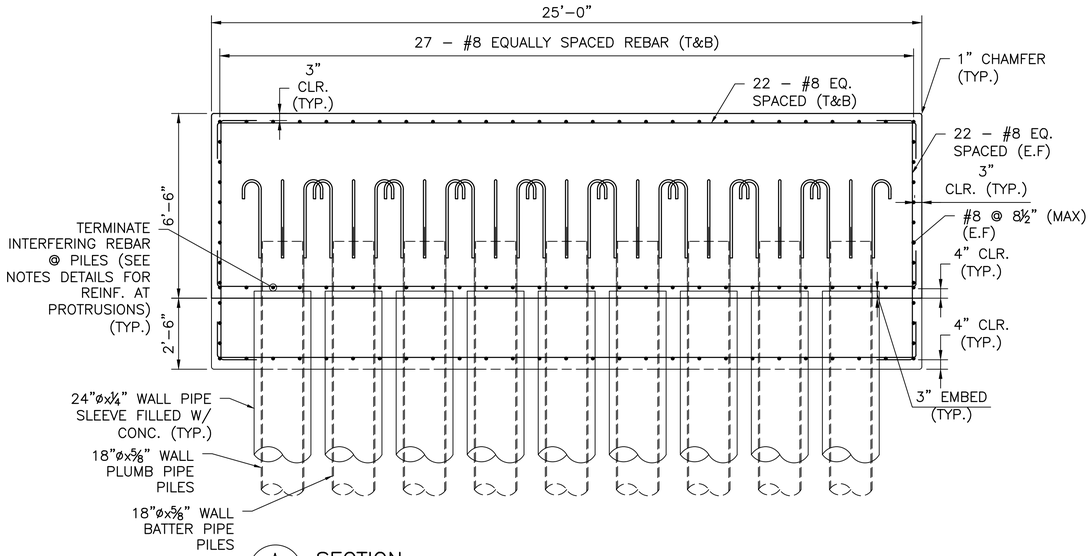

A S-02 GA-3 SECTION

0 1' 2' 4'

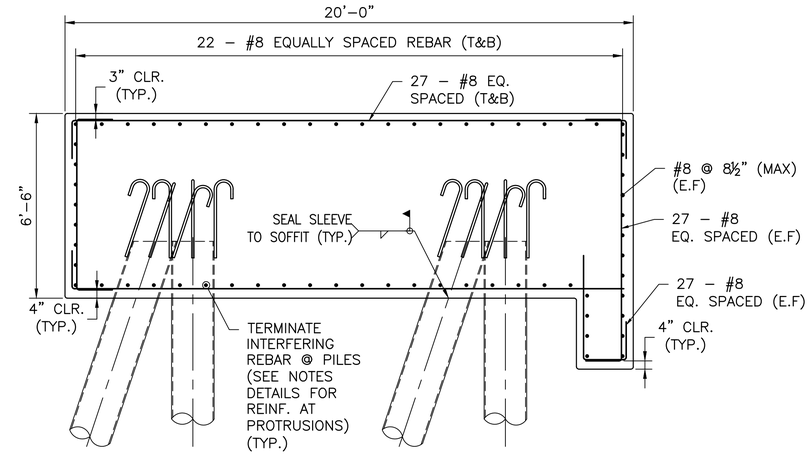

B S-02 GA-3 SECTION

0 1' 2' 4'

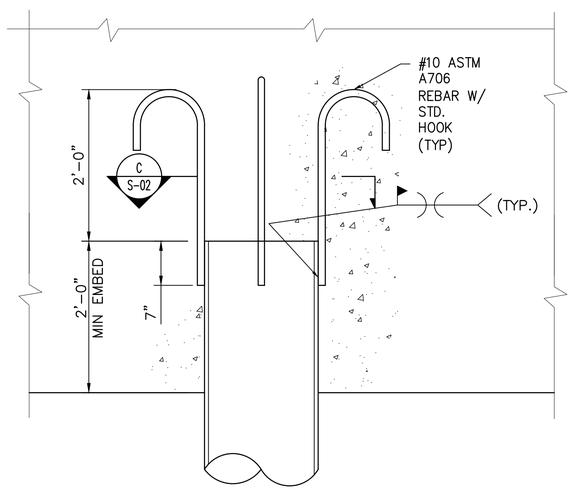

PILE HOOK DETAIL

0 1' 2'

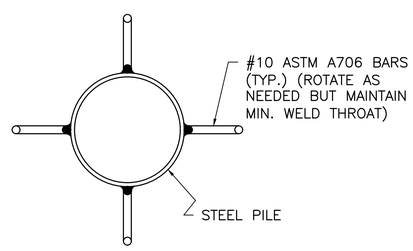

C S-02 S-02 SECTION

0 1' 2'

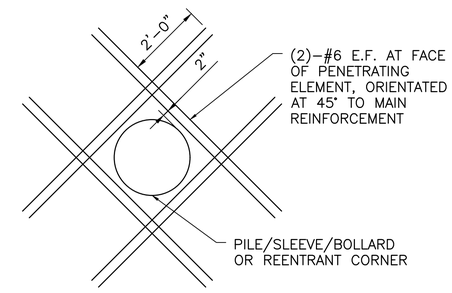

TYPICAL SUPPLEMENTAL REINFORCEMENT PLAN AT INTERFERENCE

N.T.S.

NOTES:

1. FOR GENERAL NOTES, SEE DWGS. GN–1 & GN–2.
2. BOLLARD ANCHORAGE NOT SHOWN FOR CLARITY. INSTALL BOLLARDS USING MANUFACTURER'S RECOMMENDED PROCEDURES, METHODS, AND MATERIALS. PILE HOOKS MAY NEED TO BE ROTATED IN PLAN TO AVOID INTERFERENCE WITH BOLLARD ANCHORS.
3. BOTTOM MAT REINFORCEMENT THAT WOULD INTERFERE WITH PILES SHALL BE DETAILED WITH STANDARD HOOKS OR TAILS FOR TERMINATION AT PILE LOCATIONS.
4. THE CONTRACTOR HAS THE OPTION OF POURING AN INITIAL LIFT FOR EASE OF FORMING; NOTE THAT AN ADDITIONAL BOTTOM MAT OF REINFORCEMENT WOULD THEN BE REQUIRED IN THE NEXT LIFT AND THAT DOWELS MAY BE REQUIRED BETWEEN LIFTS. THE CONTRACTOR SHALL SUBMIT FORMWORK DETAILS ALONG WITH A POURING PLAN FOR REVIEW.

NAB-2021-61797
Revised 2/2/22
Sheet 13 of 15

ISSUED FOR PERMIT REVISIION
DATE: 02/02/22

Urban Engineers, INC.
530 Walnut Street
Philadelphia, PA 19106
o. 215.922.8080

SEAL

BY:

DATE:

REV	DATE	DESCRIPTION	BY	CK'D	APP'D
1	02/02/22	ISSUED FOR PERMIT REVISION	MKP	PB	MGW
0	06/16/21	ISSUED FOR PERMIT	MKP	PB	MGW

GOLD BOND BUILDING PRODUCTS, LLC — BALTIMORE, MD

GBBP BALTIMORE NEW DOLPHIN

BREASTING DOLPHIN REINFORCEMENT DETAILS

SCALE: AS NOTED
DATE: 02/02/22
DESIGN BY: MKP
APPROVED BY: MGW
DRAWN BY: FYC
CHECKED BY: SMM
PROJECT NO.: 2020610213.000
SHEET NUMBER: S-02
SHT. NO.: SHT 1 OF TOT SH
DRAWING FILE NO.: S-02 BRE... .DWG
REV. NO.: 1

ISSUED FOR PERMIT

DATE PRINTED: 2/3/2022 11:07:00 AM

T:\PROJECTS\ICON-GOING\2020 PROJECTS\2020610213.000 - NGC BALTIMORE NEW DOLPHIN\WORK\DRAWINGS\WORKING DRAWINGS\CURRENTS-02 BREASTING DOLPHIN REINFORCEMENT DETAILS.DWG

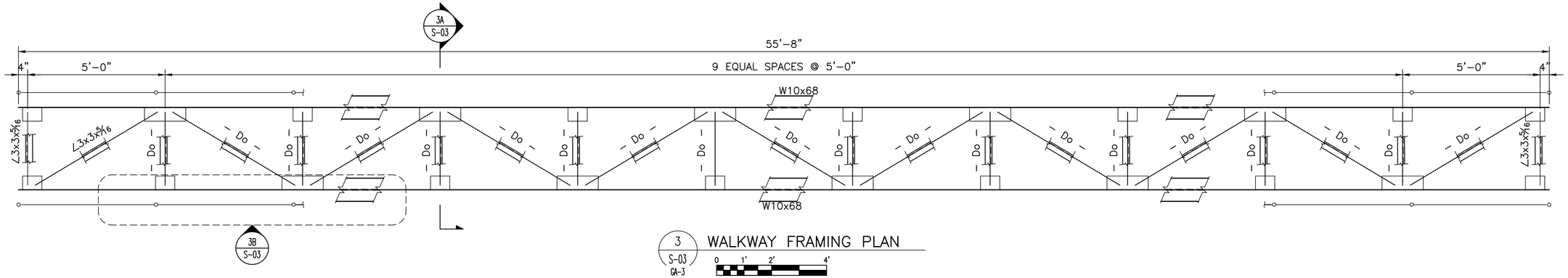

3 S-03 GA-3 WALKWAY FRAMING PLAN

0 1' 2' 4'

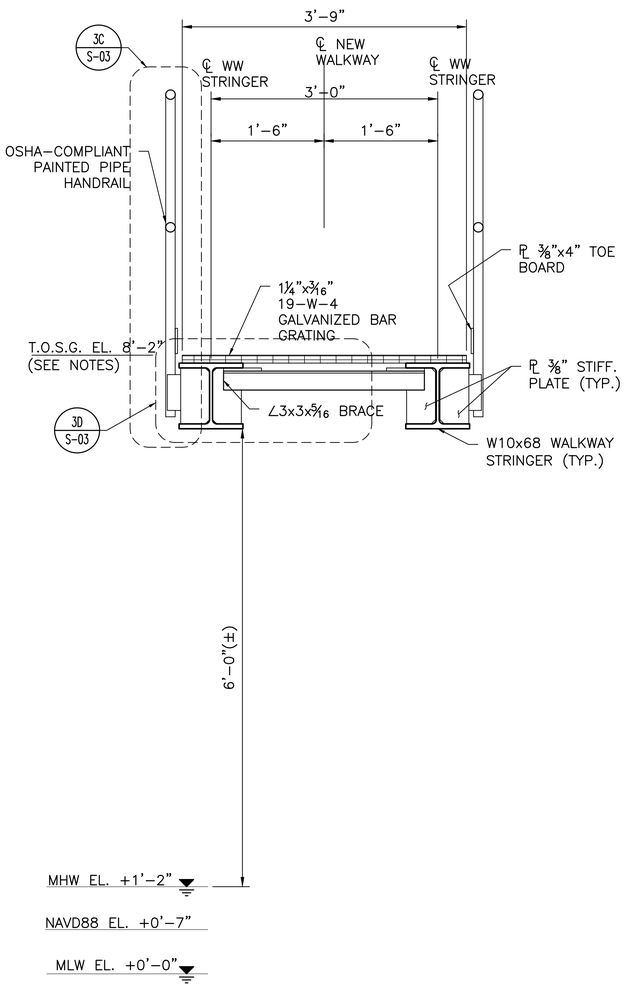

3A S-03 S-03 TYPICAL WALKWAY SECTION

0 1' 2'

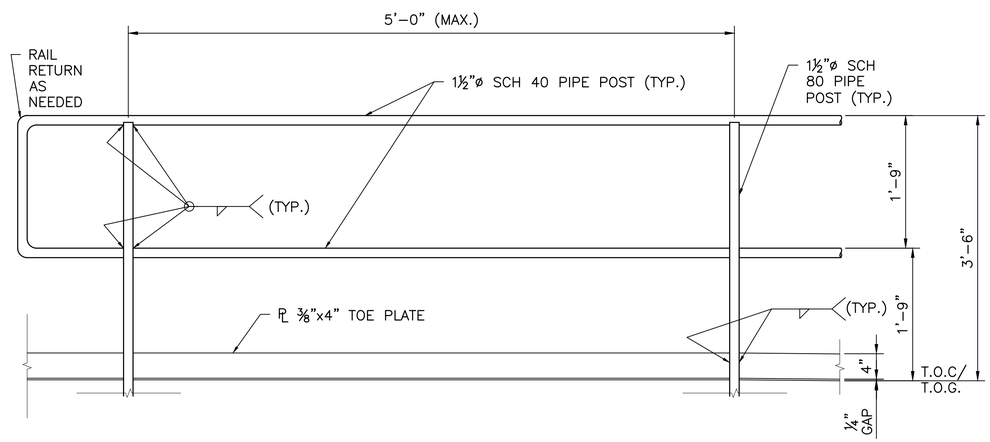

3B S-03 S-03 HANDRAIL ELEVATION VIEW

0 1' 2'

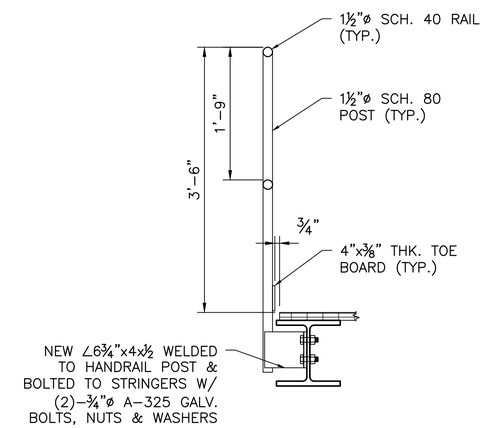

3C S-03 S-03 TYPICAL WALKWAY SECTION

0 1' 2'

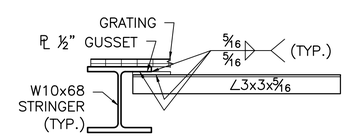

3D S-03 S-03 TYPICAL WALKWAY SECTION

0 1' 2'

NOTES:

1. FOR GENERAL NOTES, SEE GN-1 & GN-2.

NAB-2021-61797
Revised 2/2/22
Sheet 14 of 15

ISSUED FOR PERMIT REVISIION
DATE: 02/02/22

URBAN ENGINEERS
Urban Engineers, INC.
530 Walnut Street
Philadelphia, PA 19106
o. 215.922.8080

SEAL

BY:

DATE:

REV	DATE	DESCRIPTION	BY	CKD	APD
1	02/02/22	ISSUED FOR PERMIT REVISIIN	MKP	PB	MGW
0	06/16/21	ISSUED FOR PERMIT	MKP	PB	MGW

GOLD BOND BUILDING PRODUCTS, LLC
BALTIMORE, MD

GBBP BALTIMORE NEW DOLPHIN

WALKWAY FRAMING PLAN, SECTIONS AND DETAILS

SCALE: AS NOTED
DESIGN BY: MKP
APPROVED BY: MGW
DATE: 02/02/22
DRAWN BY: FYC
CHECKED BY: SMM
PROJECT NO.: 2020610213.000
SHEET NUMBER: S-03
SHT. NO.: SHT 1 OF TOT SH
DRAWING FILE NO.: S-01.dwg... .DWG
REV. NO.: 1

ISSUED FOR PERMIT

DATE PRINTED: 2/3/2022 11:07:49 AM

T:\PROJECTS\ON-GOING\2020 PROJECTS\2020610213.000 - NGC BALTIMORE NEW DOLPHIN\WORK\DRAWINGS\WORKING DRAWINGS\CURRENTS-01.DWG

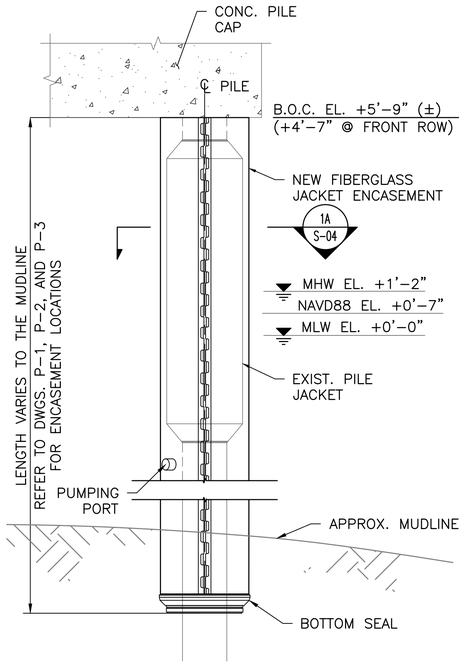

1 S-04 S-04 TYPICAL PLUMB PILE ENCASEMENT DETAIL

0 1' 2' 4'

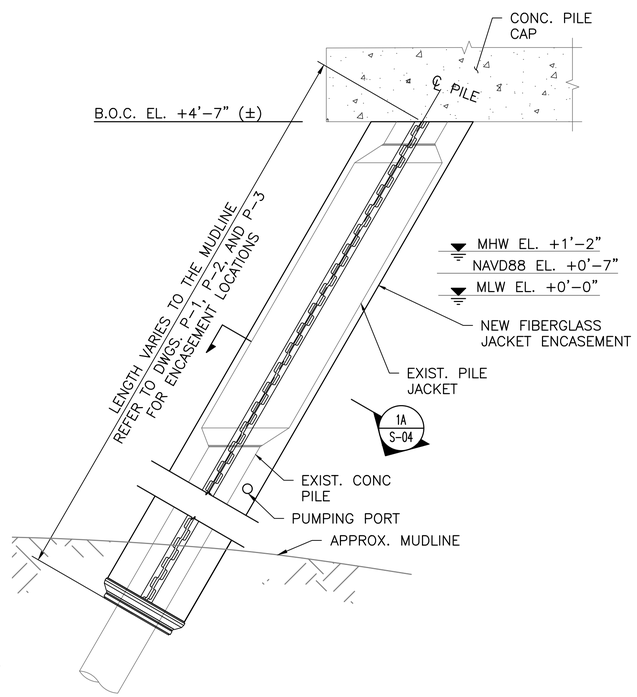

2 S-04 S-04 TYPICAL BATTER PILE ENCASEMENT DETAIL

0 1' 2' 4'

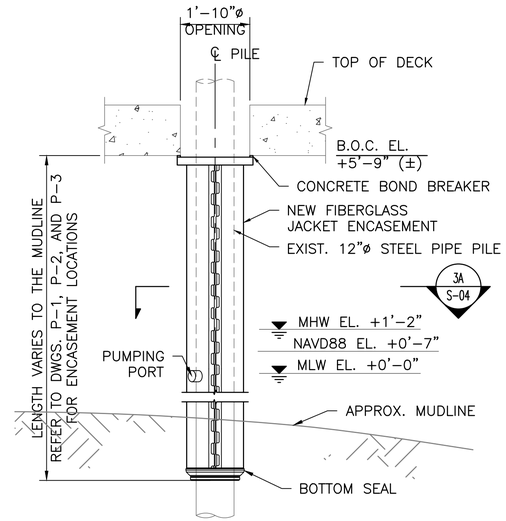

3 S-04 S-04 TYPICAL CRUSHER HOUSE PILE ENCASEMENT DETAIL

0 1' 2' 4'

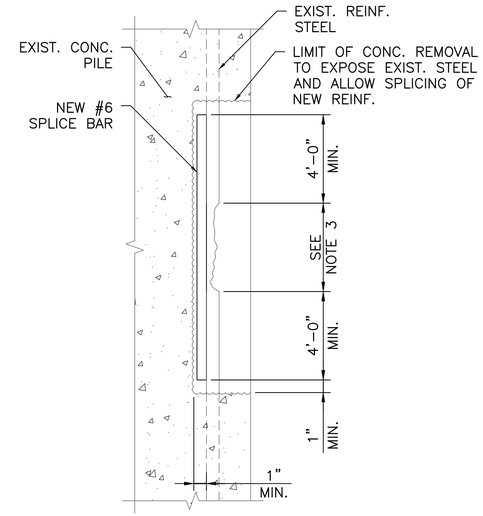

4 S-04 S-04 TYPICAL PILE SPALL REPAIR DETAIL

N.T.S.

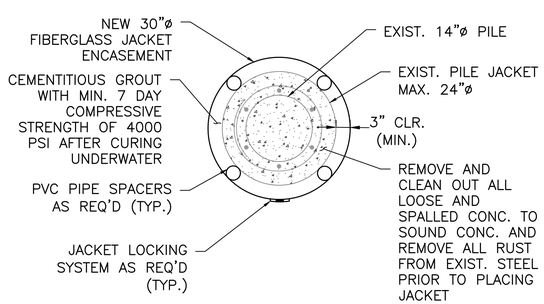

1A S-04 S-04 TYPICAL ENCASEMENT SECTION

0 1' 2'

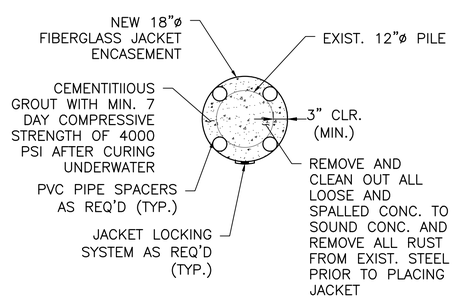

3A S-04 S-04 TYPICAL CRUSHER HOUSE PILE ENCASEMENT SECTION

0 1' 2'

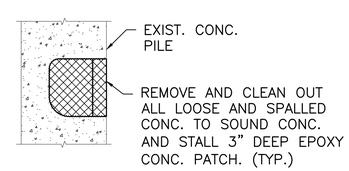

5 S-04 S-04 TYPICAL PILE SPALL REPAIR DETAIL

N.T.S.

NOTES:

1. FOR GENERAL NOTES, SEE DWGS. GN-1 & GN-2.
2. CLEAN EXISTING PILE OF ALL DIRT, OIL, GREASE AND LOOSE MATERIAL PRIOR TO INSTALLING NEW JACKET.
3. DURING REMOVAL OF THE EXISTING CONCRETE, IF DETERIORATED REINFORCING STEEL BARS ARE ENCOUNTERED, THE CONTRACTING OFFICER SHALL BE NOTIFIED IMMEDIATELY. IF LESS THAN 75 PERCENT OF THE ORIGINAL CROSS SECTION OF THE BAR REMAINS, THE DETERIORATED PORTION OF THE BAR SHALL BE CUT OUT AND REPLACED WITH A NEW REINFORCING BAR OF THE SAME SIZE. ALL REINFORCING STEEL SHALL BE ASTM A615 GRADE 60. PROVIDE LAP LENGTH AS INDICATED IN THE TABLE ON DWGS. GN-1. LAPS CAN BE ELIMINATED WITH APPROPRIATE MECHANICAL COUPLERS.

NAB-2021-61797
Revised 2/2/22
Sheet 15 of 15

ISSUED FOR PERMIT REVISIION
DATE: 02/02/22

Urban Engineers, INC.
530 Walnut Street
Philadelphia, PA 19106
o. 215.922.8080

SEAL

BY:

DATE:

REV	DATE	DESCRIPTION	BY	CKD	APD
1	02/02/22	ISSUED FOR PERMIT REVISION	MKP	PB	MGW
0	06/16/21	ISSUED FOR PERMIT	MKP	PB	MGW

GOLD BOND BUILDING PRODUCTS, LLC
BALTIMORE, MD

GBBP BALTIMORE NEW DOLPHIN

PILE ENCASEMENT REPAIR DETAILS

SCALE: AS NOTED
DESIGN BY: MKP
APPROVED BY: MGW
DATE: 02/02/22
DRAWN BY: FYC
CHECKED BY: SMM
PROJECT NO.: 2020610213.000
SHEET NUMBER: S-04
SHT. NO.: SHT 1 OF TOT SH
DRAWING FILE NO.: S-01.dwg... .DWG
REV. NO.: 1

ISSUED FOR PERMIT

DATE PRINTED: 2/3/2022 11:08:28 AM

T:\PROJECTS\ON-GOING\2020 PROJECTS\2020610213.000 - NGC BALTIMORE NEW DOLPHIN\WORK\DRAWINGS\WORKING DRAWINGS\CURRENTS-01.DWG